LOT 14
IN OR 2053/1640
SEA GROVE PB 6/152-154

WOODS MARK T
2735 SEA GROVE LN
FERNANDINA BEACH, FL 32034

2023

00-00-31-1676-0014-0000

BUILDING CHARACTERISTICS

ELEMENT	CD	CONSTRUCTION
Exterior Wall	16	WD FR STUC 80
Exterior Wall	23	REINF CONC 20
Roof Structur	08	IRREGULAR 100
Roof Cover	03	COMP SHNGL 100
Interior Wall	05	DRYWALL 100
Interior Floo	15	HARDTILE 70
Interior Floo	14	CARPET 30
Air Condition	03	CENTRAL 100
Heating Type	04	AIR DUCTED 100
Bedrooms		3 100
Bathrooms		2.5 100
Frame	02	WOOD FRAME 100
Stories	1.	1. 100
Units		0 100
Occupancy	00	NONE 100
Quality	05	Quality Level 05
DOR CODE	0100	SINGLE FAMILY
MAP NUM		MKT AREA 01
NEIGHBORHOOD/LOC	1080.00	

AREA TYPE	TOTAL GROSS AREA	PCT OF BASE	TOT ADJ AREA	SUBAREA MARKET VALUE
BAS	2,278	100	2,278	361,991
BAS	210	100	210	33,371
DCK	480	10	48	7,627
FGR	529	55	291	46,242
FOP	50	30	15	2,383
FSP	108	40	43	6,833
USP	225	30	68	10,805
TOTALS	3,880		2,953	469,253

MARKET ADJUSTMENTS

TYPE	MDL	EFF. AREA	TOT ADJ PTS	EFF. BASE RATE	REPL. COST NEW	AYB	EYB	ECON	FNCT		NORM	% COND
0500	01	2,953	124.5970	177.55	524,305	2000	2001	0	0	0	10.50	89.50

1 SFR CUST – 100% - 2017 Heated Area: 2488 HX Base Yr 2017

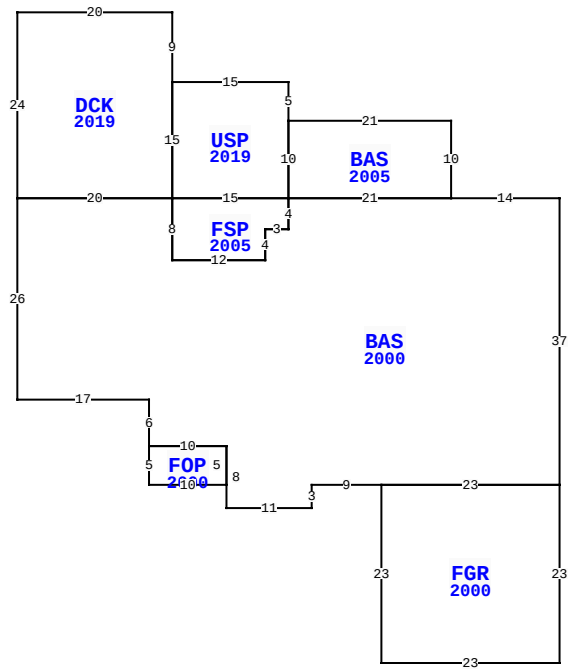

2735 SEA GROVE LN, FERNANDINA BEACH

BLD DATE		LGL DATE	
XF DATE		LAND DATE	08/01/2023 MLU
INC DATE		AG DATE	

NASSAU COUNTY PROPERTY

PAGE 1 of 1 2

VALUATION SUMMARY

VALUATION BY		STANDARD
Tax Group: 2	Tax Dist:	
BUILDING MARKET VALUE		469,253
TOTAL MARKET OB/XF VALUE		21,673
TOTAL LAND VALUE - MARKET		225,000
TOTAL MARKET VALUE		715,926
SOH/AGL Deduction		247,473
ASSESSED VALUE		468,453
TOTAL EXEMPTION VALUE	HX HB	50,000
BASE TAXABLE VALUE		418,453
TOTAL JUST VALUE		715,926
NCON VALUE		0
INCOME VALUE		
PREVIOUS YEAR MKT VALUE		586,290

PERMIT NUM	DESCRIPTION	AMT	ISSUED
20190279	SCRNENCL	0	05/02/2019
20101054	XFOB	800	06/25/2010
20101038	H/AC	6,500	06/22/2010
20041134	ADDITION	30,000	06/18/2004
19991437	NEW CONSTR	145,500	10/22/1999

SALES DATA

OFF RECORD Number	DATE	TYPE INST	Q / U	V / I	RSN CD	SALE PRICE
2053/1640	6/15/2016	WD	Q	I	02	499,000
GRANTOR: LOCKARD ADAM J & DONN						
GRANTEE: WOODS MARK T						
1579/0027	7/30/2008	WD	U	I	06	100
GRANTOR: JACKSON JOSEPH A III						
GRANTEE: LOCKARD ADAM J & DO						

BUILDING NOTES

BUILDING DIMENSIONS

BAS=[YR=2000] W14 BAS=[YR=2005] N10 W21 USP=[YR=2019] N5 W15 DCK=[YR=2019] N9 W20 S24 E20 N15$ S15 FSP=[YR=2005] S8 E12 N4 E3 N4 W15$ E15 N10$ S10 E21$ W21 S4 W3 S4 W12 N8W20 S26 E17 S6 FOP 2000= S5 E10 N5 W10 $ E10 S8 E11 N3 E9 FGR=[YR=2000] S23 E23 N23 W23 $ E23 N37 $.

EXTRA FEATURES

LN	OB/XF CODE	DESCRIPTION	BLD	CAP	L	W	UNITS	UT	Adj R	ADJ UNIT PRICE	ORIG COND	YEAR ON	YEAR ACTUAL	Q	% COND	OB/XF MKT VALUE	NOTES
1	0500	FP-PRE FAB	0	100	0	0	1.00	UT	3,500.00	3,500.00	100	2000	2000	3	85	2,975	
2	0810	CONCRETE A	0	100	0	0	1,335.00	SF	6.50	6.50	100	2000	2000	3	80	6,942	
3	0810	CONCRETE A	0	100	3	6	18.00	SF	6.50	6.50	100	2000	2000	3	80	94	
4	0830	FLAGSTONE	0	100	15	20	300.00	SF	12.00	12.00	100	2000	2000	3	80	2,880	
5	0830	FLAGSTONE	0	100	6	3	18.00	SF	24.00	24.00	100	2005	2005	3	87	376	
6	0830	FLAGSTONE	0	100	3	4	12.00	SF	24.00	24.00	100	2001	2001	3	82	236	
7	0911	SCRN RM A	0	100	15	20	300.00	SF	17.50	17.50	100	2019	2019	3	90	4,725	
8	0855	CONC PAVER	0	100	0	0	270.00	SF	10.00	10.00	100	2019	2019	3	99	2,673	
9	0855	CONC PAVER	0	100	0	0	78.00	SF	10.00	10.00	100	2019	2019	3	99	772	

LAND DESCRIPTION

TOTAL OB/XF 21,673

LN	USE CODE	CLS	LAND USE DESCRIPTION	CAP	RD	LOC ZONE	FRONT	DEPTH	TOT LND UTS	UNIT TYPE	DT	DPTH FACT	% COND	TOT ADJ	UNIT PRICE	ADJ UNIT PRICE	LAND VALUE	OTHER ADJUSTMENTS AND NOTES	YEAR	DENSITY	DECL	FRZ	YR	CONSRV
1	000100	C	SFR	100		R-1A	0.00	0.00	1.00	LT		1.00	1.00	1.00	225,000.00	225,000.00	225,000							

REVIEW DATE 12/05/2019 BY DJ Total Acres: 0.00 Total Land Value: 225,000 Market: 0 Agricultural: 0 Common: 225,000 PRINTED 08/02/2023 BY SYS