LOT 9
IN OR 766 PG 1252
F/K/A PAR 14-16 OF 20-3N-29

PORTER KENNETH D & BARBARA L
2625 LONG BOAT DRIVE
FERNANDINA BEACH, FL 32034

2023

00-00-31-1652-0009-0000

BUILDING CHARACTERISTICS

ELEMENT	CD	CONSTRUCTION
Exterior Wall	05	AVERAGE 100
Roof Structur	03	GABLE/HIP 100
Roof Cover	03	COMP SHNGL 100
Interior Wall	05	DRYWALL 100
Interior Floo	12	HARDWOOD 50
Interior Floo	14	CARPET 50
Air Condition	03	CENTRAL 100
Heating Type	04	AIR DUCTED 100
Bedrooms		3 100
Bathrooms		2.5 100
Frame	02	WOOD FRAME 100
Stories	2.	2. 100
Units		0 100
Occupancy	00	NONE 100
Quality	04	Quality Level 04
DOR CODE	0100	SINGLE FAMILY
MAP NUM		MKT AREA 01
NEIGHBORHOOD/LOC	1049.00	

AREA TYPE	TOTAL GROSS AREA	PCT OF BASE	TOT ADJ AREA	SUBAREA MARKET VALUE
BAS	1,823	100	1,823	233,177
FGR	540	55	297	37,989
FOP	351	30	105	13,430
FSP	236	40	94	12,023
FUS	833	100	833	106,548
PTO	90	5	4	511
TOTALS	3,873		3,156	403,680

MARKET ADJUSTMENTS

TYPE	MDL	EFF. AREA	TOT ADJ PTS	EFF. BASE RATE	REPL. COST NEW	AYB	EYB	ECON	FNCT		NORM	% COND
0500	01	3,156	102.8790	146.60	462,670	1996	1996	0	0	0	12.75	87.25

1 SFR CUST – 100% - 1997 Heated Area: 2656 HX Base Yr 1997

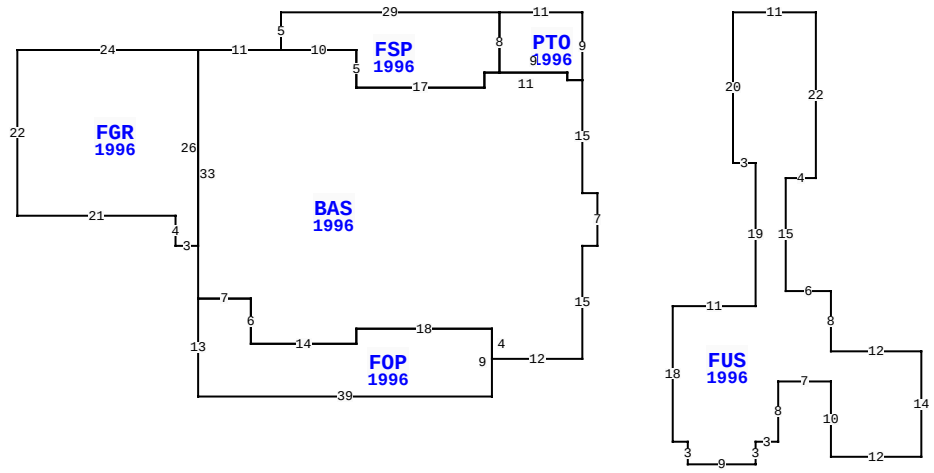

2625 LONG BOAT DR, FERNANDINA BEACH

BLD DATE		LGL DATE	
XF DATE		LAND DATE	
INC DATE		AG DATE	

NASSAU COUNTY PROPERTY

VALUATION SUMMARY

VALUATION BY		STANDARD
Tax Group: 2	Tax Dist:	
BUILDING MARKET VALUE		403,680
TOTAL MARKET OB/XF VALUE		15,119
TOTAL LAND VALUE - MARKET		160,000
TOTAL MARKET VALUE		578,799
SOH/AGL Deduction		323,413
ASSESSED VALUE		255,386
TOTAL EXEMPTION VALUE	HX HB	50,000
BASE TAXABLE VALUE		205,386
TOTAL JUST VALUE		578,799
NCON VALUE		0
INCOME VALUE		
PREVIOUS YEAR MKT VALUE		452,432

PERMIT NUM	DESCRIPTION	AMT	ISSUED
20121177	REMODEL	6,000	06/19/2012
B969908	NEW CONSTR	147,514	07/05/1996

SALES DATA

OFF RECORD Number	DATE	TYPE INST	Q / U	V / I	RSN CD	SALE PRICE
0766/1252	7/26/1996	WD	Q	V		35,000

GRANTOR: AMELIA LANDINGS PARTN

GRANTEE: PORTER KENNETH & BA

BUILDING NOTES

BUILDING DIMENSIONS

PTO=[YR=1996] W11 FSP=[YR=1996] W29 S5 BAS=[YR=1996] W11 FGR=[YR=1996] W24 S22 E21 S4 E3 N26$ S33 FOP=[YR=1996] S13 E39 N9 W18 S2 W14 N6 W7$ E7 S6 E14 N2 E18 S4 E12 N15 E2 N7 W2 N15 W2 N1 W11 S2 W17 N5 W10$ E10 S5 E17 N2 E2 N8$ S8 E9S1 E2 N9$ PTR=E20 FUS=[YR=1996] E11 S22 W4 S15 E6 S8 E12 S14 W12 N10 W7 S8 W3 S3 W9 N3 W2 N18 E11 N19 W3 N20$ W20$.

EXTRA FEATURES

LN	OB/XF CODE	DESCRIPTION	BLD	CAP	L	W	UNITS	UT	Adj R	ADJ UNIT PRICE	ORIG COND	YEAR ON	YEAR ACTUAL	Q	% COND	OB/XF MKT VALUE	NOTES
1	0504	FP-ELECTRI	0	100	0	0	1.00	UT	2,000.00	2,000.00	100	1996	1996	3	80	1,600	
2	0811	CONCRETE B	0	100	0	0	853.00	SF	5.20	5.20	100	1996	1996	3	73	3,238	
3	0810	CONCRETE A	0	100	0	0	78.00	SF	6.50	6.50	100	1996	1996	3	73	370	
4	0855	CONC PAVER	0	100	0	0	120.00	SF	10.00	10.00	100	2013	2013	3	95	1,140	
5	0855	CONC PAVER	0	100	0	0	1,221.00	SF	7.00	7.00	100	2013	2013	3	95	8,120	
6	0476	VF 6 SBPL	0	100	0	0	14.00	LF	32.00	32.00	100	2013	2013	3	87	390	
7	0470	VNYL GATE	0	100	0	0	1.00	UT	300.00	300.00	100	2013	2013	3	87	261	

LAND DESCRIPTION

TOTAL OB/XF 15,119

LN	USE CODE	CLS	LAND USE DESCRIPTION	CAP	RD	LOC ZONE	FRONT	DEPTH	TOT LND UTS	UNIT TYPE	DT	DPTH FACT	% COND	TOT ADJ	UNIT PRICE	ADJ UNIT PRICE	LAND VALUE	OTHER ADJUSTMENTS AND NOTES	YEAR	DENSITY	DECL	FRZ	YR	CONSRV
1	000100	C	SFR	100			0.00	0.00	1.00	LT		1.00	1.00	1.00	160,000.00	160,000.00	160,000							

REVIEW DATE 02/22/2017 BY DJ Total Acres: 0.00 Total Land Value: 160,000 Market: 0 Agricultural: 0 Common: 160,000 PRINTED 08/02/2023 BY SYS