LOT 47
THE RESIDENCE @ AMELIA
LANDINGS #3 PB 5/251

CHURCH CHRISTINA & ERIC &/SKARPALEZOS LEE
2191 HIGH RIGGER PLACE
FERNANDINA BEACH, FL 32034

2023

00-00-31-1651-0047-0000

NASSAU COUNTY PROPERTY

BUILDING CHARACTERISTICS

ELEMENT	CD	CONSTRUCTION
Exterior Wall	05	AVERAGE 100
Roof Structur	03	GABLE/HIP 100
Roof Cover	03	COMP SHNGL 100
Interior Wall	05	DRYWALL 100
Interior Floo	13	LVT/LAMNT 70
Interior Floo	11	CLAY TILE 30
Air Condition	03	CENTRAL 100
Heating Type	04	AIR DUCTED 100
Bedrooms		4 100
Bathrooms		3 100
Frame	02	WOOD FRAME 100
Stories	1.	1. 100
Units		0 100
Occupancy	00	NONE 100
Quality	04	Quality Level 04
DOR CODE	0100	SINGLE FAMILY
MAP NUM		MKT AREA 01
NEIGHBORHOOD/LOC	1049.00	

AREA TYPE	TOTAL GROSS AREA	PCT OF BASE	TOT ADJ AREA	SUBAREA MARKET VALUE
BAS	1,706	100	1,706	245,612
BAS	417	100	417	60,035
DCK	220	10	22	3,167
DCK	440	10	44	6,335
FGR	400	55	220	31,673
FOP	20	30	6	864
FUS	240	100	240	34,552
PTO	10	5	0	0
TOTALS	3,453		2,655	382,238

MARKET ADJUSTMENTS

TYPE	MDL	EFF. AREA	TOT ADJ PTS	EFF. BASE RATE	REPL. COST NEW	AYB	EYB	ECON	FNCT		NORM	% COND
0500	01	2,655	113.1984	161.31	428,278	1996	2000	0	0	0	10.75	89.25

1 SFR CUST – 100% - 0 Heated Area: 2363 HX Base Yr

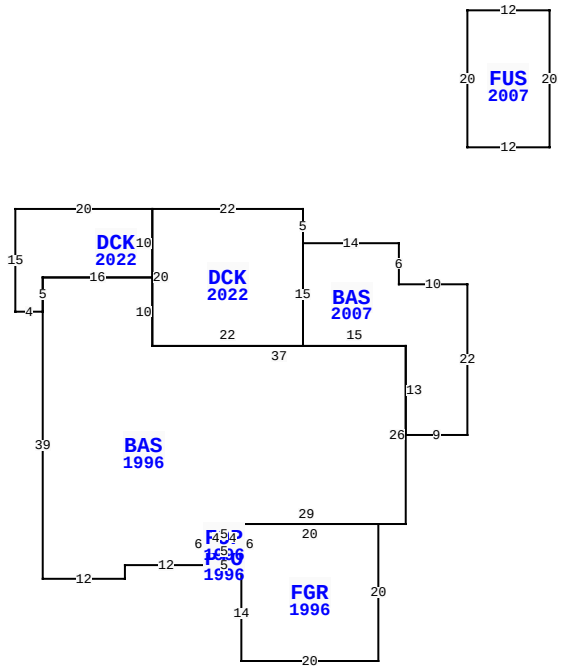

2191 HIGH RIGGER PL, FERNANDINA BEACH

BLD DATE		LGL DATE	
XF DATE		LAND DATE	
INC DATE		AG DATE	

VALUATION SUMMARY

VALUATION BY		STANDARD
Tax Group: 2	Tax Dist:	
BUILDING MARKET VALUE		382,238
TOTAL MARKET OB/XF VALUE		5,377
TOTAL LAND VALUE - MARKET		160,000
TOTAL MARKET VALUE		547,615
SOH/AGL Deduction		179,887
ASSESSED VALUE		367,728
TOTAL EXEMPTION VALUE	HX HB	50,000
BASE TAXABLE VALUE		317,728
TOTAL JUST VALUE		547,615
NCON VALUE		14,122
INCOME VALUE		
PREVIOUS YEAR MKT VALUE		423,878

PERMIT NUM	DESCRIPTION	AMT	ISSUED
20071754	OTHER	1,300	09/17/2007
20071339	REMODEL	500	07/18/2007
20071020	ELEC OTHER	15,000	06/06/2007
20070663	OTHER	2,000	04/20/2007
20070671	H/AC	1,000	04/20/2007
20070635	ELEC OTHER	1,500	04/17/2007

SALES DATA

OFF RECORD Number	DATE	TYPE INST	Q U /	V I /	RSN CD	SALE PRICE
2628/0648	3/27/2023	WD	Q	I	01	660,000
GRANTOR: NEESE TAYVE						
GRANTEE: CHURCH CHRISTINA &						
2113/1349	4/14/2017	WD	Q	I	01	340,000
GRANTOR: WALKER KENNETH W JR &						
GRANTEE: NEESE TAYVE						

BUILDING NOTES

BUILDING DIMENSIONS

BAS=[YR=2007] W10 N6 W14 DCK=[YR=2022] N5 W22 DCK=[YR=2022] W20 S15 E4 BAS=[YR=1996] S39 E12 N2 E12 PTO=[YR=1996] E5 FGR=[YR=1996] S14 E20N20 W20 FOP=[YR=1996] W5 S4 E5 N4$ S6$ N2 W5 S2$ N6 E29 N26 W37 N10 W16 S5$ N5 E16 N10$ S20 E22 N15$ S15 E15 S13 E9 N22$ PTR= N20 FUS=[YR=2007] N20 E12 S20 W12$ S20$.

EXTRA FEATURES

LN	OB/XF CODE	DESCRIPTION	BLD	CAP	L	W	UNITS	UT	Adj R	ADJ UNIT PRICE	ORIG COND	YEAR ON	YEAR ACTUAL	Q	% COND	OB/XF MKT VALUE	NOTES
1	0811	CONCRETE B	0	100	0	0	600.00	SF	5.20	5.20	100	1996	1996	3	73	2,278	
2	0810	CONCRETE A	0	100	21	3	63.00	SF	6.50	6.50	100	1996	1996	3	73	299	
3	0500	FP-PRE FAB	0	100	0	0	1.00	UT	3,500.00	3,500.00	100	1996	1996	3	80	2,800	

LAND DESCRIPTION

TOTAL OB/XF 5,377

LN	USE CODE	CLS	LAND USE DESCRIPTION	CAP	RD	LOC ZONE	FRONT	DEPTH	TOT LND UTS	UNIT TYPE	DT	DPTH FACT	% COND	TOT ADJ	UNIT PRICE	ADJ UNIT PRICE	LAND VALUE	OTHER ADJUSTMENTS AND NOTES	YEAR	DENSITY	DECL	FRZ	YR	CONSRV
1	000100	C	SFR	100	0003		0.00	0.00	1.00	LT		1.00	1.00	1.00	160,000.00	160,000.00	160,000							

REVIEW DATE 07/12/2018 BY DJX Total Acres: 0.00 Total Land Value: 160,000 Market: 0 Agricultural: 0 Common: 160,000 PRINTED 08/02/2023 BY SYS