PT OF LOT 41 & 42
IN OR 1880/1691
THE RESIDENCE @ AMELIA

WILLIAMS MICHAEL J & PATRICIA F
2193 FIRST AV
FERNANDINA BEACH, FL 32034

2023

00-00-31-1651-0041-0010

NASSAU COUNTY PROPERTY

BUILDING CHARACTERISTICS

ELEMENT	CD	CONSTRUCTION
Exterior Wall	16	WD FR STUC 100
Roof Structur	03	GABLE/HIP 100
Roof Cover	03	COMP SHNGL 100
Interior Wall	05	DRYWALL 100
Interior Floo	14	CARPET 80
Interior Floo	11	CLAY TILE 20
Air Condition	03	CENTRAL 100
Heating Type	04	AIR DUCTED 100
Bedrooms		3 100
Bathrooms		2 100
Frame	02	WOOD FRAME 100
Stories	2.	2. 100
Units		0 100
Occupancy	00	NONE 100
Quality	04	Quality Level 04
DOR CODE	0100	SINGLE FAMILY
MAP NUM		MKT AREA 01
NEIGHBORHOOD/LOC	1049.00	

AREA TYPE	TOTAL GROSS AREA	PCT OF BASE	TOT ADJ AREA	SUBAREA MARKET VALUE
BAS	1,429	100	1,429	208,580
FGR	430	55	236	34,447
FOP	30	30	9	1,314
FUS	547	100	547	79,841
UOP	12	20	2	292
UOP	267	20	53	7,736
TOTALS	2,715		2,276	332,210

MARKET ADJUSTMENTS

TYPE	MDL	EFF. AREA	TOT ADJ PTS	EFF. BASE RATE	REPL. COST NEW	AYB	EYB	ECON	FNCT		NORM	% COND
0500	01	2,276	113.8074	162.18	369,122	2002	2002	0	0	0	10.00	90.00

1 SFR CUST – 100% - 2014 Heated Area: 1976 HX Base Yr 2014

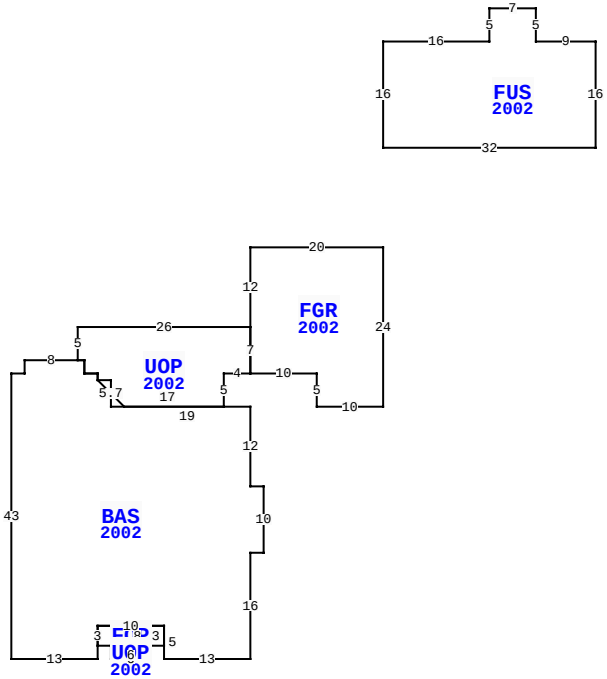

2193 1ST AVE, FERNANDINA BEACH

BLD DATE		LGL DATE	
XF DATE		LAND DATE	
INC DATE		AG DATE	

VALUATION SUMMARY

VALUATION BY		STANDARD
Tax Group: 2	Tax Dist:	
BUILDING MARKET VALUE		332,210
TOTAL MARKET OB/XF VALUE		8,038
TOTAL LAND VALUE - MARKET		160,000
TOTAL MARKET VALUE		500,248
SOH/AGL Deduction		234,018
ASSESSED VALUE		266,230
TOTAL EXEMPTION VALUE	HX HB	50,000
BASE TAXABLE VALUE		216,230
TOTAL JUST VALUE		500,248
NCON VALUE		0
INCOME VALUE		
PREVIOUS YEAR MKT VALUE		397,213

PERMIT NUM	DESCRIPTION	AMT	ISSUED
B0112510	NEW CONSTR	125,000	11/29/2001
B012508	NEW CONSTR	12,000	11/29/2001

SALES DATA

OFF RECORD Number	DATE	TYPE INST	Q / U	V / I	RSN CD	SALE PRICE
1880/1691	9/20/2013	WD	Q	I	02	330,000
GRANTOR: ARMSTRONG THOMAS FRED						
GRANTEE: WILLIAMS MICHAEL J						
1880/1689	9/17/2013	QC	U	I	11	100
GRANTOR: ARMSTRONG VICTORIA L						
GRANTEE: ARMSTRONG THOMAS FR						

BUILDING NOTES

BUILDING DIMENSIONS

FGR=[YR=2002] W20 S12 UOP=[YR=2002] W26 S5 BAS=[YR=2002] W8 S2 W2 S43 E13 N2 FOP=[YR=2002] E2 UOP=[YR=2002] S2 E6 N2 W6 $ E8 N3 W10 S3$ N3 E10 S5 E13 N16 E2 N10 W2 N12 W19 U4 L4 N1 W2 N2 W1$ E1 S2 E2 S1 E2 S4 E17 N5 E4 N7$ S7 E10 S5 E10 N24$ PTR=N15 FUS=[YR=2002] N16 E16 N5 E7 S5 E9 S16 W32$ S15$.

EXTRA FEATURES

LN	OB/XF CODE	DESCRIPTION	BLD	CAP	L	W	UNITS	UT	Adj R	ADJ UNIT PRICE	ORIG COND	YEAR ON	YEAR ACTUAL	Q	% COND	OB/XF MKT VALUE	NOTES
1	0500	FP-PRE FAB	0	100	0	0	1.00	UT	3,500.00	3,500.00	100	2002	2002	3	87	3,045	
2	0812	CONCRETE C	0	100	0	0	1,336.00	SF	4.00	4.00	100	2002	2002	3	83	4,436	
3	0810	CONCRETE A	0	100	0	0	97.00	SF	6.50	6.50	100	2002	2002	3	83	523	
4	1242	WD DECK A	0	100	4	4	16.00	SF	10.00	10.00	100	2002	2002	3	21	34	

LAND DESCRIPTION

TOTAL OB/XF 8,038

LN	USE CODE	CLS	LAND USE DESCRIPTION	CAP	RD	LOC ZONE	FRONT	DEPTH	TOT LND UTS	UNIT TYPE	DT	DPTH FACT	% COND	TOT ADJ	UNIT PRICE	ADJ UNIT PRICE	LAND VALUE	OTHER ADJUSTMENTS AND NOTES	YEAR	DENSITY	DECL	FRZ	YR	CONSRV
1	000100	C	SFR	100	0003		0.00	0.00	1.00	LT		1.00	1.00	1.00	160,000.00	160,000.00	160,000							

REVIEW DATE 05/26/2017 BY DJX Total Acres: 0.00 Total Land Value: 160,000 Market: 0 Agricultural: 0 Common: 160,000 PRINTED 08/02/2023 BY SYS