BLOCK D LOT 1
IN OR 2221/1664
PIRATES COVE 1 REPLAT PB 5/8

FOERY ROBERT FRANKLIN JR
210 JEAN LAFITTE BLVD
FERNANDINA BEACH, FL 32034

2023

00-00-31-1640-000D-0010

NASSAU COUNTY PROPERTY

BUILDING CHARACTERISTICS

ELEMENT	CD	CONSTRUCTION
Exterior Wall	10	ABOVE AVG 100
Roof Structur	08	IRREGULAR 100
Roof Cover	03	COMP SHNGL 100
Interior Wall	05	DRYWALL 100
Interior Floo	12	HARDWOOD 50
Interior Floo	14	CARPET 50
Air Condition	03	CENTRAL 100
Heating Type	04	AIR DUCTED 100
Bedrooms		3 100
Bathrooms		4 100
Frame	02	WOOD FRAME 100
Stories	1.5	1.5 100
Units		0 100
Occupancy	00	NONE 100
Quality	03	Quality Level 03
DOR CODE	0100	SINGLE FAMILY
MAP NUM		MKT AREA 01
NEIGHBORHOOD/LOC	1083.00	

AREA TYPE	TOTAL GROSS AREA	PCT OF BASE	TOT ADJ AREA	SUBAREA MARKET VALUE
BAS	1,946	100	1,946	251,466
FGR	847	55	466	60,217
FOP	184	30	55	7,107
FOP	493	30	148	19,125
FSP	57	40	23	2,972
FSP	62	40	25	3,231
FST	28	55	15	1,939
FUS	1,252	100	1,252	161,786
UUS	40	50	20	2,585
UUS	84	50	42	5,427
TOTALS	5,133		4,062	524,900

MARKET ADJUSTMENTS

TYPE	MDL	EFF. AREA	TOT ADJ PTS	EFF. BASE RATE	REPL. COST NEW	AYB	EYB	ECON	FNCT		NORM	% COND
0500	01	4,062	100.7600	143.58	583,222	2001	2001	0	0	0	10.00	90.00

1 SFR CUST – 100% - 2019 Heated Area: 3198 HX Base Yr 2019

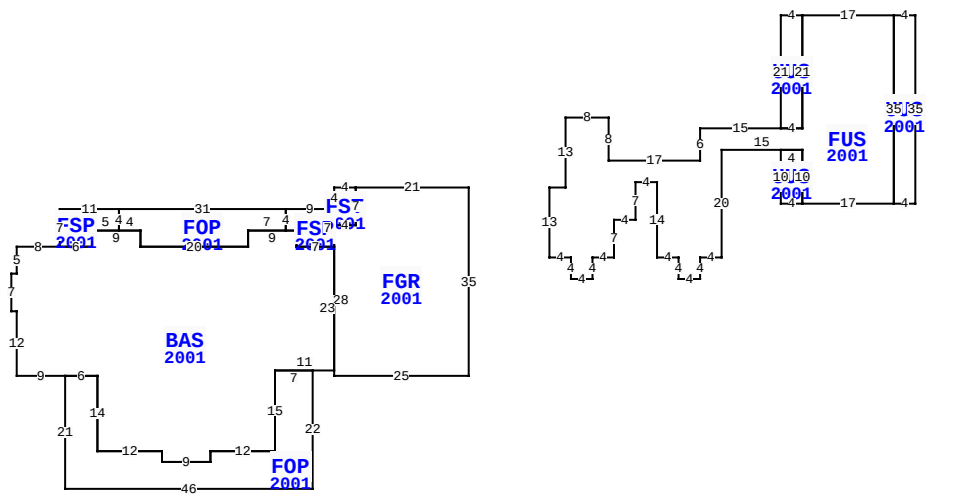

** This building has 11 Sub-Areas

210 JEAN LAFITTE BLVD, FERNANDINA BEACH

BLD DATE		LGL DATE	
XF DATE		LAND DATE	
INC DATE		AG DATE	

VALUATION SUMMARY

VALUATION BY		STANDARD
Tax Group: 2	Tax Dist:	
BUILDING MARKET VALUE		524,900
TOTAL MARKET OB/XF VALUE		32,108
TOTAL LAND VALUE - MARKET		250,000
TOTAL MARKET VALUE		807,008
SOH/AGL Deduction		193,636
ASSESSED VALUE		613,372
TOTAL EXEMPTION VALUE	HX HB	50,000
BASE TAXABLE VALUE		563,372
TOTAL JUST VALUE		807,008
NCON VALUE		0
INCOME VALUE		
PREVIOUS YEAR MKT VALUE		655,372

PERMIT NUM	DESCRIPTION	AMT	ISSUED
20111135	H/AC	2,500	07/12/2011
20041582	OTHER	2,000	09/01/2004
20041550	ELEC OTHER	1,000	08/26/2004
20010769	XFOB	4,000	05/09/2001
20010579	SWIM POOL	12,000	04/04/2001
2004345	NEW CONSTR	159,000	11/14/2000

SALES DATA

OFF RECORD Number	DATE	TYPE INST	Q / U	V / I	RSN CD	SALE PRICE
2221/1664	6/07/2018	WD	U	I	11	100
GRANTOR: DODD LISA M						
GRANTEE: FOERY ROBERT FRANKL						
2203/0732	6/07/2018	WD	Q	I	02	729,000
GRANTOR: DODD LISA M						
GRANTEE: FOERY ROBERT						

BUILDING NOTES

BUILDING DIMENSIONS

FGR=[YR=2001] W21 FST=[YR=2001] W4 S4 FSP=[YR=2001] W9 FOP=[YR=2001] W31 FSP=[YR=2001] W11 S7 BAS=[YR=2001] W8 S5 W1 S7 E1 S12 E9 FOP=[YR=2001] S21 E46 N22 W7 S15 W12 S2 W9 N2 W12 N14 W6 $ E6 S14 E12 S2 E9 N2 E12 N15 E11 N23 W7 N3 W9 S3 W20 N3 W9 S3 W6 $ E6 N3 E5 N4 $ S4 E4 S3 E20 N3 E7 N4 $ S4 E2 S3 E7 N7 $ S3 E4 N7 $ S7 W4 S28 E25 N35 $ PTR= E15 FUS=[YR=2001] E3 N13 E8 S8 E17 N6 E15 UUS=[YR=2001] N21 E4 S21 W4 $ E4 N21 E17 UUS=[YR=2001] E4 S35 W4 N35 $ S35 W17 UUS=[YR=2001] W4 N10 E4 S10 $ N10 W15 S20 W4 S4 W4 N4 W4 N14 W4 S7 W4 S7 W4 S4 W4 N4 W4 N13$ W15 $.

EXTRA FEATURES

L N	OB/XF CODE	DESCRIPTION	BLD	CAP	L	W	UNITS	UT	Adj R	ADJ UNIT PRICE	ORIG COND	YEAR ON	YEAR ACTUAL	Q	% COND	OB/XF MKT VALUE	NOTES
1	0500	FP-PRE FAB	0	100	0	0	1.00	UT	3,500.00	3,500.00	100	2001	2001	3	86	3,010	
2	0877	JACUZZI	0	100	0	0	2.00	UT	1,000.00	1,000.00	100	2001	2001	3	20	400	
3	1242	WD DECK A	0	100	9	4	36.00	SF	10.00	10.00	100	2001	2001	3	20	72	
4	1242	WD DECK A	0	100	18	3	54.00	SF	11.50	11.50	100	2001	2001	3	20	124	
5	1242	WD DECK A	0	100	4	4	16.00	SF	10.00	10.00	100	2001	2001	3	20	32	
6	0810	CONCRETE A	0	100	63	4	252.00	SF	6.50	6.50	100	2001	2001	3	82	1,343	
7	0810	CONCRETE A	0	100	0	0	1,905.00	SF	6.50	6.50	100	2001	2001	3	82	10,154	
8	0858	SCULP CONC	0	100	0	0	288.00	SF	13.00	13.00	100	2001	2001	3	95	3,557	
9	0861	POOL GUNIT	0	100	0	0	265.00	SF	85.00	85.00	100	2001	2001	3	29	6,532	
10	0875	HOT TUB	0	100	0	0	1.00	UT	1,200.00	1,200.00	100	2001	2001	3	20	240	

TOTAL OB/XF 25,464

LAND DESCRIPTION

L N	USE CODE	CLS	LAND USE DESCRIPTION	CAP	R D	LOC ZONE	FRONT	DEPTH	TOT LND UTS	UNIT TYPE	D T	DPTH FACT	% COND	TOT ADJ	UNIT PRICE	ADJ UNIT PRICE	LAND VALUE	OTHER ADJUSTMENTS AND NOTES	YEAR	DENSITY	DECL	FRZ	YR	CONSRV
1	000100	C	SFR	100		R-1A	0.00	0.00	1.00	LT		1.00	1.00	1.00	250,000.00	250,000.00	250,000							

REVIEW DATE 10/24/2019 BY DJA Total Acres: 0.00 Total Land Value: 250,000 Market: 0 Agricultural: 0 Common: 250,000 PRINTED 08/02/2023 BY SYS

BLOCK D LOT 1
IN OR 2221/1664
PIRATES COVE 1 REPLAT PB 5/8

FOERY ROBERT FRANKLIN JR
210 JEAN LAFITTE BLVD
FERNANDINA BEACH, FL 32034

2023

00-00-31-1640-000D-0010

NASSAU COUNTY PROPERTY

BUILDING CHARACTERISTICS

ELEMENT	CD	CONSTRUCTION

DOR CODE	0100	SINGLE FAMILY	
MAP NUM		MKT AREA	01
NEIGHBORHOOD/LOC	1083.00		

AREA TYPE	TOTAL GROSS AREA	PCT OF BASE	TOT ADJ AREA	SUBAREA MARKET VALUE
TOTALS				

MARKET ADJUSTMENTS

TYPE	MDL	EFF. AREA	TOT ADJ PTS	EFF. BASE RATE	REPL. COST NEW	AYB	EYB	ECON	FNCT		NORM	% COND

BLD DATE		LGL DATE	
XF DATE		LAND DATE	
INC DATE		AG DATE	

VALUATION SUMMARY

VALUATION BY		STANDARD
Tax Group: 2	Tax Dist:	
BUILDING MARKET VALUE		524,900
TOTAL MARKET OB/XF VALUE		32,108
TOTAL LAND VALUE - MARKET		250,000
TOTAL MARKET VALUE		807,008
SOH/AGL Deduction		193,636
ASSESSED VALUE		613,372
TOTAL EXEMPTION VALUE	HX HB	50,000
BASE TAXABLE VALUE		563,372
TOTAL JUST VALUE		807,008
NCON VALUE		0
INCOME VALUE		
PREVIOUS YEAR MKT VALUE		655,372

PERMIT NUM	DESCRIPTION	AMT	ISSUED

SALES DATA

OFF RECORD Number	DATE	TYPE INST	Q / U	V / I	RSN CD	SALE PRICE
2221/1664	6/07/2018	WD	U	I	11	100
GRANTOR: DODD LISA M						
GRANTEE: FOERY ROBERT FRANKL						
2203/0732	6/07/2018	WD	Q	I	02	729,000
GRANTOR: DODD LISA M						
GRANTEE: FOERY ROBERT						

BUILDING NOTES

BUILDING DIMENSIONS

EXTRA FEATURES

LN	OB/XF CODE	DESCRIPTION	BLD	CAP	L	W	UNITS	UT	Adj R	ADJ UNIT PRICE	ORIG COND	YEAR ON	YEAR ACTUAL	Q	% COND	OB/XF MKT VALUE	NOTES
11	0871	POOL HTR R	0	100	0	0	1.00	UT	2,000.00	2,000.00	100	2001	2001	3	20	400	
12	0858	SCULP CONC	0	100	0	0	355.00	SF	13.00	13.00	100	2001	2001	3	95	4,384	
13	0910	SCRN RM L	0	100	20	31	620.00	SF	15.00	15.00	100	2001	2001	3	20	1,860	

LAND DESCRIPTION

TOTAL OB/XF 6,644

LN	USE CODE	CLS	LAND USE DESCRIPTION	CAP	RD	LOC ZONE	FRONT	DEPTH	TOT LND UTS	UNIT TYPE	DT	DPTH FACT	% COND	TOT ADJ	UNIT PRICE	ADJ UNIT PRICE	LAND VALUE	OTHER ADJUSTMENTS AND NOTES	YEAR	DENSITY	DECL	FRZ	YR	CONSRV

REVIEW DATE 10/24/2019 BY DJA Total Acres: 0.00 Total Land Value: 250,000 Market: 0 Agricultural: 0 Common: 250,000 PRINTED 08/02/2023 BY SYS