BLOCK A LOT 11
IN OR 2088/346
PIRATES COVE #1 PB 4/6

MCMAHON COLLEEN
676 BETHLEHEM PIKE
FLOURTOWN, PA 19031

2023

00-00-31-1640-000A-0110

NASSAU COUNTY PROPERTY

BUILDING CHARACTERISTICS

ELEMENT	CD	CONSTRUCTION
Exterior Wall	19	COMMON BRK 70
Exterior Wall	05	AVERAGE 30
Roof Structur	03	GABLE/HIP 100
Roof Cover	03	COMP SHNGL 100
Interior Wall	05	DRYWALL 100
Interior Floo	11	CLAY TILE 100
Air Condition	03	CENTRAL 100
Heating Type	04	AIR DUCTED 100
Bedrooms		4 100
Bathrooms		3.5 100
Frame	02	WOOD FRAME 100
Stories	2.	2. 100
Units		0 100
BUD8 Adjustme	02	DIST FB 100
Occupancy	00	NONE 100
Quality	03	Quality Level 03
DOR CODE	0100	SINGLE FAMILY
MAP NUM		MKT AREA 01
NEIGHBORHOOD/LOC	1083.00	

AREA TYPE	TOTAL GROSS AREA	PCT OF BASE	TOT ADJ AREA	SUBAREA MARKET VALUE
BAL	165	15	25	2,098
BAS	2,003	100	2,003	168,113
FGR	420	55	231	19,388
FOP	140	30	42	3,525
FST	96	55	53	4,449
FUS	900	100	900	75,537
STR	72	10	7	588
STR	80	10	8	672
UOP	240	20	48	4,029
TOTALS	4,116		3,317	278,397

MARKET ADJUSTMENTS

TYPE	MDL	EFF. AREA	TOT ADJ PTS	EFF. BASE RATE	REPL. COST NEW	AYB	EYB	ECON	FNCT		NORM	% COND
0100	01	3,317	120.4280	108.69	360,525	1964	1990	0	0	0	22.78	77.22

1 SINGLE FAM – 0% - 0 Heated Area: 2903 HX Base Yr

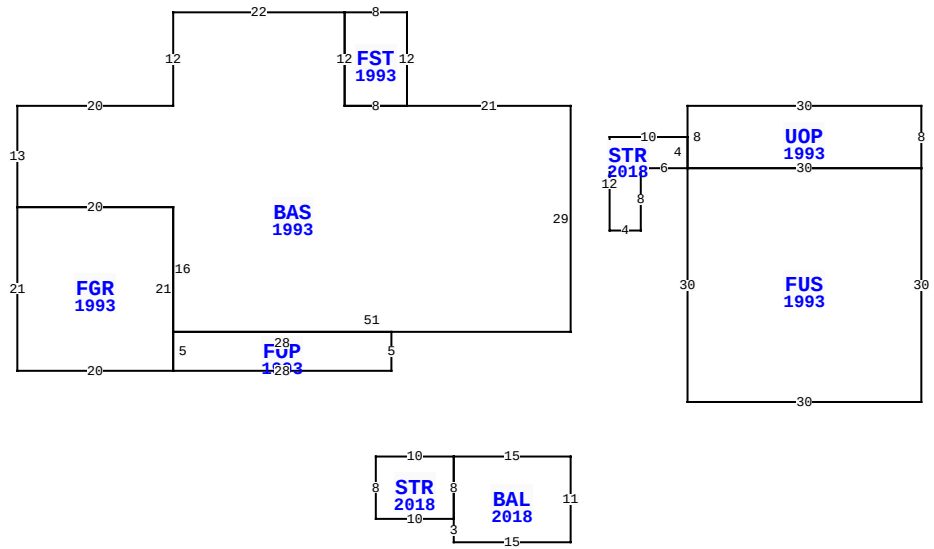

2641 GREGOR MCGREGOR BLVD, FERNANDINA BEACH

BLD DATE	04/02/2014 KK	LGL DATE	
XF DATE		LAND DATE	
INC DATE		AG DATE	

VALUATION SUMMARY

VALUATION BY	STANDARD
Tax Group: 2	Tax Dist:
BUILDING MARKET VALUE	278,397
TOTAL MARKET OB/XF VALUE	21,853
TOTAL LAND VALUE - MARKET	250,000
TOTAL MARKET VALUE	550,250
SOH/AGL Deduction	81,991
ASSESSED VALUE	468,259
TOTAL EXEMPTION VALUE	0
BASE TAXABLE VALUE	468,259
TOTAL JUST VALUE	550,250
NCON VALUE	0
INCOME VALUE	
PREVIOUS YEAR MKT VALUE	497,141

PERMIT NUM	DESCRIPTION	AMT	ISSUED
20171674	DECK3RD	42,000	06/01/2017
20081585	GAS	895	10/17/2008
20053081	REPAIR/RRF	2,000	11/28/2005
20012740	REMODEL	2,400	01/07/2002
6893	REPAIR/RRF	3,500	02/07/1992

SALES DATA

OFF RECORD Number	DATE	TYPE INST	Q U	V I	RSN CD	SALE PRICE
2088/0346	12/01/2016	WD	Q	I	01	310,000
GRANTOR: FOREMAN BLANCA R & DO						
GRANTEE: MCMAHON COLLEEN						
1818/0001	9/26/2012	QC	U	I	11	100
GRANTOR: FOREMAN BLANCA R						
GRANTEE: FOREMAN BLANCA R &						

BUILDING NOTES

BUILDING DIMENSIONS

BAS=[YR=1993] W21 FST=[YR=1993] N12 W8 S12 E8 $ W8 N12 W22 S12 W20 S13 FGR=[YR=1993] S21 E20 FOP=[YR=1993] E28 N5 W28 S5 $ N21 W20 $ E20 S16 E51 N29 $ PTR= E15 UOP=[YR=1993] E30 S8 FUS=[YR=1993] S30 W30 N30 STR=[YR=2018] W6 S8 W4 N12 E10 S4$ E30 $ W30 N8 $ W15 $ PTR=S45 BAL=[YR=2018] S11 W15 N3 STR=[YR=2018] W10 N8 E10 S8$ N8 E15$ N45$.

EXTRA FEATURES

L N	OB/XF CODE	DESCRIPTION	BLD	CAP	L	W	UNITS	UT	Adj R	ADJ UNIT PRICE	ORIG COND	YEAR ON	YEAR ACTUAL	Q	% COND	OB/XF MKT VALUE	NOTES
1	0861	POOL GUNIT	0	0	34	17	578.00	SF	85.00	85.00	100	1970	1970	3	20	9,826	
2	0810	CONCRETE A	0	0	0	0	960.00	SF	6.50	6.50	100	1964	1964	3	20	1,248	
3	0845	KOOL DECK	0	0	0	0	370.00	SF	7.25	7.25	100	1970	1970	3	22	590	
4	0810	CONCRETE A	0	0	0	0	102.00	SF	6.50	6.50	100	1964	1964	3	20	133	
5	0100	BAR-B-Q	0	0	0	0	1.00	UT	200.00	200.00	100	1976	1976	3	20	40	
6	0462	ST/AL FNC	0	0	0	0	336.00	SF	10.00	10.00	100	2018	2018	3	90	3,024	
7	0476	VF 6 SBPL	0	0	0	0	96.00	LF	32.00	32.00	100	2018	2018	3	95	2,918	
8	0470	VNYL GATE	0	0	0	0	1.00	UT	300.00	300.00	100	2018	2018	3	95	285	
10	0810	CONCRETE A	0	0	0	0	627.00	SF	6.50	6.50	100	1964	1964	3	20	815	
11	0940	SHEDS/PORT	0	0	10	10	100.00	SF	30.00	30.00	100	1976	1976	3	20	600	

TOTAL OB/XF 19,479

LAND DESCRIPTION

L N	USE CODE	CLS	LAND USE DESCRIPTION	CAP	R D	LOC ZONE	FRONT	DEPTH	TOT LND UTS	UNIT TYPE	D T	DPTH FACT	% COND	TOT ADJ	UNIT PRICE	ADJ UNIT PRICE	LAND VALUE	OTHER ADJUSTMENTS AND NOTES	YEAR	DENSITY	DECL	FRZ	YR	CONSRV
1	000100	C	SFR	0	0003	R-1A	0.00	0.00	1.00	LT		1.00	1.00	1.00	250,000.00	250,000.00	250,000							

REVIEW DATE 07/10/2018 BY DJ Total Acres: 0.00 Total Land Value: 250,000 Market: 0 Agricultural: 0 Common: 250,000 PRINTED 08/02/2023 BY SYS

BLOCK A LOT 11
IN OR 2088/346
PIRATES COVE #1 PB 4/6

MCMAHON COLLEEN
676 BETHLEHEM PIKE
FLOURTOWN, PA 19031

2023

00-00-31-1640-000A-0110

BUILDING CHARACTERISTICS

ELEMENT	CD	CONSTRUCTION

DOR CODE	0100	SINGLE FAMILY	
MAP NUM		MKT AREA	01
NEIGHBORHOOD/LOC	1083.00		

AREA TYPE	TOTAL GROSS AREA	PCT OF BASE	TOT ADJ AREA	SUBAREA MARKET VALUE
TOTALS				

MARKET ADJUSTMENTS

TYPE	MDL	EFF. AREA	TOT ADJ PTS	EFF. BASE RATE	REPL. COST NEW	AYB	EYB	ECON	FNCT		NORM	% COND

BLD DATE	04/02/2014	KK	LGL DATE
XF DATE			LAND DATE
INC DATE			AG DATE

NASSAU COUNTY PROPERTY

PAGE 2 of 2 2

VALUATION SUMMARY

VALUATION BY	STANDARD
Tax Group: 2	Tax Dist:
BUILDING MARKET VALUE	278,397
TOTAL MARKET OB/XF VALUE	21,853
TOTAL LAND VALUE - MARKET	250,000
TOTAL MARKET VALUE	550,250
SOH/AGL Deduction	81,991
ASSESSED VALUE	468,259
TOTAL EXEMPTION VALUE	0
BASE TAXABLE VALUE	468,259
TOTAL JUST VALUE	550,250
NCON VALUE	0
INCOME VALUE	
PREVIOUS YEAR MKT VALUE	497,141

PERMIT NUM	DESCRIPTION	AMT	ISSUED

SALES DATA

OFF RECORD Number	DATE	TYPE INST	Q / U	V / I	RSN CD	SALE PRICE
2088/0346	12/01/2016	WD	Q	I	01	310,000
GRANTOR: FOREMAN BLANCA R & DO						
GRANTEE: MCMAHON COLLEEN						
1818/0001	9/26/2012	QC	U	I	11	100
GRANTOR: FOREMAN BLANCA R						
GRANTEE: FOREMAN BLANCA R &						

BUILDING NOTES

BUILDING DIMENSIONS

EXTRA FEATURES

LN	OB/XF CODE	DESCRIPTION	BLD	CAP	L	W	UNITS	UT	Adj R	ADJ UNIT PRICE	ORIG COND	YEAR ON	YEAR ACTUAL	Q	% COND	OB/XF MKT VALUE	NOTES
12	0810	CONCRETE A	0	0	0	0	425.00	SF	6.50	6.50	100	1976	1976	3	28	774	
13	0504	FP-ELECTRI	0	0	0	0	2.00	UT	2,000.00	2,000.00	100	1976	1976	3	40	1,600	

LAND DESCRIPTION

TOTAL OB/XF 2,374

LN	USE CODE	CLS	LAND USE DESCRIPTION	CAP	RD	LOC ZONE	FRONT	DEPTH	TOT LND UTS	UNIT TYPE	DT	DPTH FACT	% COND	TOT ADJ	UNIT PRICE	ADJ UNIT PRICE	LAND VALUE	OTHER ADJUSTMENTS AND NOTES	YEAR	DENSITY	DECL	FRZ	YR	CONSRV

REVIEW DATE 07/10/2018 BY DJ Total Acres: 0.00 Total Land Value: 250,000 Market: 0 Agricultural: 0 Common: 250,000 PRINTED 08/02/2023 BY SYS