LOT 59
IN OR 1992/1704
PARKWAY NORTH PB 5/263

GARCIA ERNEST & BARBARA C
4444 BEAN ST
FERNANDINA BEACH, FL 32034

2023

00-00-31-163N-0059-0000

BUILDING CHARACTERISTICS

ELEMENT	CD	CONSTRUCTION
Exterior Wall	16	WD FR STUC 100
Roof Structur	03	GABLE/HIP 100
Roof Cover	03	COMP SHNGL 100
Interior Wall	05	DRYWALL 100
Interior Floo	14	CARPET 80
Interior Floo	11	CLAY TILE 20
Air Condition	03	CENTRAL 100
Heating Type	04	AIR DUCTED 100
Bedrooms		4 100
Bathrooms		2 100
Frame	02	WOOD FRAME 100
Stories	1.	1. 100
Units		0 100
Occupancy	00	NONE 100
Quality	05	Quality Level 05
DOR CODE	0100	SINGLE FAMILY
MAP NUM		MKT AREA 01
NEIGHBORHOOD/LOC	1072.00	

AREA TYPE	TOTAL GROSS AREA	PCT OF BASE	TOT ADJ AREA	SUBAREA MARKET VALUE
BAS	1,945	100	1,945	291,752
FGR	508	55	279	41,850
FOP	73	30	22	3,300
FSP	157	40	63	9,450
TOTALS	2,683		2,309	346,353

MARKET ADJUSTMENTS

TYPE	MDL	EFF. AREA	TOT ADJ PTS	EFF. BASE RATE	REPL. COST NEW	AYB	EYB	ECON	FNCT		NORM	% COND
0500	01	2,309	120.3048	171.43	395,832	1997	1997	0	0	0	12.50	87.50

1 SFR CUST – 100% - 2017 Heated Area: 1945 HX Base Yr 2017

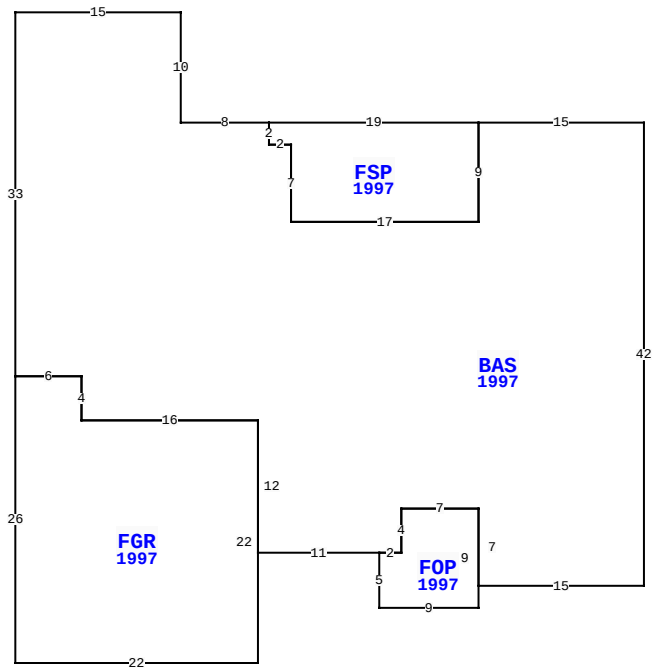

4444 BEAN ST, FERNANDINA BEACH

BLD DATE		LGL DATE	
XF DATE		LAND DATE	
INC DATE		AG DATE	

NASSAU COUNTY PROPERTY

VALUATION SUMMARY

VALUATION BY		STANDARD
Tax Group: 2	Tax Dist:	
BUILDING MARKET VALUE		346,353
TOTAL MARKET OB/XF VALUE		7,887
TOTAL LAND VALUE - MARKET		200,000
TOTAL MARKET VALUE		554,240
SOH/AGL Deduction		234,859
ASSESSED VALUE		319,381
TOTAL EXEMPTION VALUE	HX HB	50,000
BASE TAXABLE VALUE		269,381
TOTAL JUST VALUE		554,240
NCON VALUE		0
INCOME VALUE		
PREVIOUS YEAR MKT VALUE		513,246

PERMIT NUM	DESCRIPTION	AMT	ISSUED
B9710592	NEW CONSTR	126,744	07/09/1997

SALES DATA

OFF RECORD Number	DATE	TYPE INST	Q U	V I	RSN CD	SALE PRICE
1992/1704	7/09/2015	WD	Q	I	01	349,000
GRANTOR: RAFFERTY GEORGE P REV						
GRANTEE: GARCIA ERNEST & BAR						
1295/1290	2/16/2005	WD	Q	I		380,000
GRANTOR: STENHOLM CARL A & KUN						
GRANTEE: RAFFERTY GEORGE P T						

BUILDING NOTES

BUILDING DIMENSIONS

BAS=[YR=1997] W15 FSP=[YR=1997] W19 S2 E2 S7 E17 N9$ S9 W17 N7 W2 N2 W8 N10 W15 S33 FGR=[YR=1997] S26 E22 N22 W16 N4 W6$ E6 S4 E16 S12 E11 FOP=[YR=1997] S5 E9 N9 W7 S4 W2$ E2 N4 E7 S7 E15 N42$.

EXTRA FEATURES

LN	OB/XF CODE	DESCRIPTION	BLD	CAP	L	W	UNITS	UT	Adj R	ADJ UNIT PRICE	ORIG COND	YEAR ON	YEAR ACTUAL	Q	% COND	OB/XF MKT VALUE	NOTES
1	0500	FP-PRE FAB	0	100	0	0	1.00	UT	3,500.00	3,500.00	100	1997	1997	3	81	2,835	
2	0811	CONCRETE B	0	100	0	0	893.00	SF	5.20	5.20	100	1997	1997	3	75	3,483	
3	0810	CONCRETE A	0	100	53	3	159.00	SF	6.50	6.50	100	1997	1997	3	75	775	
4	0810	CONCRETE A	0	100	13	4	52.00	SF	6.50	6.50	100	1997	1997	3	75	254	
5	1242	WD DECK A	0	100	0	0	270.00	SF	10.00	10.00	100	2000	2000	3	20	540	

LAND DESCRIPTION

TOTAL OB/XF 7,887

LN	USE CODE	CLS	LAND USE DESCRIPTION	CAP	RD	LOC ZONE	FRONT	DEPTH	TOT LND UTS	UNIT TYPE	DT	DPTH FACT	% COND	TOT ADJ	UNIT PRICE	ADJ UNIT PRICE	LAND VALUE	OTHER ADJUSTMENTS AND NOTES	YEAR	DENSITY	DECL	FRZ	YR	CONSRV
1	000100	C	SFR	100			0.00	0.00	1.00	UT		1.00	1.00	1.00	200,000.00	200,000.00	200,000							

REVIEW DATE 02/16/2018 BY DJX Total Acres: 0.00 Total Land Value: 200,000 Market: 0 Agricultural: 0 Common: 200,000 PRINTED 08/02/2023 BY SYS