LOT 53
IN OR 682/328
PARKWAY NORTH PB 5/263

STANGEL MARY A
4433 BEAN ST
FERNANDINA BEACH, FL 32034

2023

00-00-31-163N-0053-0000

BUILDING CHARACTERISTICS

ELEMENT	CD	CONSTRUCTION
Exterior Wall	16	WD FR STUC 100
Roof Structur	03	GABLE/HIP 100
Roof Cover	03	COMP SHNGL 100
Interior Wall	05	DRYWALL 100
Interior Floo	14	CARPET 70
Interior Floo	12	HARDWOOD 30
Air Condition	03	CENTRAL 100
Heating Type	04	AIR DUCTED 100
Bedrooms		3 100
Bathrooms		2.5 100
Frame	02	WOOD FRAME 100
Stories	2.	2. 100
Units		0 100
Occupancy	00	NONE 100
Quality	05	Quality Level 05
DOR CODE	0100	SINGLE FAMILY
MAP NUM		MKT AREA 01
NEIGHBORHOOD/LOC	1072.00	

AREA TYPE	TOTAL GROSS AREA	PCT OF BASE	TOT ADJ AREA	SUBAREA MARKET VALUE
BAS	1,870	100	1,870	260,377
FEP	300	80	240	33,417
FGR	481	55	265	36,899
FOP	42	30	13	1,810
FOP	47	30	14	1,949
FUS	434	100	434	60,430
TOTALS	3,174		2,836	394,882

MARKET ADJUSTMENTS

TYPE	MDL	EFF. AREA	TOT ADJ PTS	EFF. BASE RATE	REPL. COST NEW	AYB	EYB	ECON	FNCT		NORM	% COND
0500	01	2,836	115.6320	164.78	467,316	1991	1991	0	0	0	15.50	84.50

1 SFR CUST – 100% - 1995 Heated Area: 2304 HX Base Yr 1995

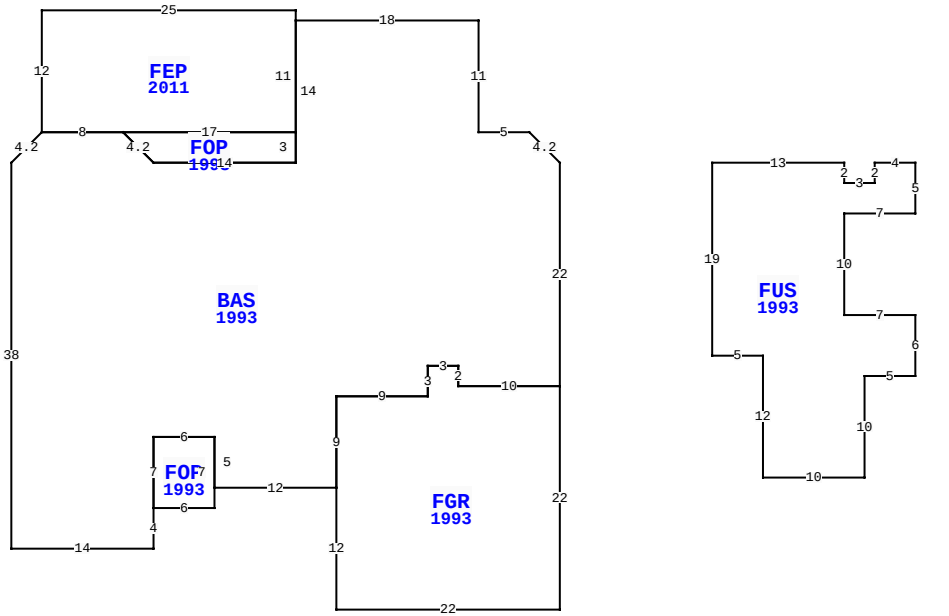

4433 BEAN ST, FERNANDINA BEACH

BLD DATE		LGL DATE	
XF DATE		LAND DATE	
INC DATE		AG DATE	

NASSAU COUNTY PROPERTY

PAGE 1 of 1 2

VALUATION SUMMARY

VALUATION BY		STANDARD
Tax Group: 2	Tax Dist:	
BUILDING MARKET VALUE		394,882
TOTAL MARKET OB/XF VALUE		5,722
TOTAL LAND VALUE - MARKET		200,000
TOTAL MARKET VALUE		600,604
SOH/AGL Deduction		370,552
ASSESSED VALUE		230,052
TOTAL EXEMPTION VALUE	HX HB VX WX	60,000
BASE TAXABLE VALUE		170,052
TOTAL JUST VALUE		600,604
NCON VALUE		0
INCOME VALUE		
PREVIOUS YEAR MKT VALUE		556,149

PERMIT NUM	DESCRIPTION	AMT	ISSUED
20110775	REMODEL	7,500	05/19/2011
20100810	REPAIR/RRF	8,000	05/14/2010
B9610093	ADDITION	1,900	10/21/1996
6474	NEW CONSTR	103,670	04/11/1991

SALES DATA

OFF RECORD Number	DATE	TYPE INST	Q / U	V / I	RSN CD	SALE PRICE
0682/0328	6/03/1993	WD	Q	I		199,500
GRANTOR: TREVETT HOMES INC						
GRANTEE: STANGEL RALPH & MAR						
0624/0741	4/22/1991	WD	Q	V		36,200
GRANTOR: EMBRY DEV CORP						
GRANTEE: TREVETT HOMES INC						

BUILDING NOTES

BUILDING DIMENSIONS

BAS=[YR=1993] L3 U3 W5 N11 W18 FEP=[YR=2011] N1 W25 S12 E8 FOP=[YR=1993] D3 R3 E14 N3 W17 $ E17 N11 $ S14 W14 U3 L3 W8 D3 L3 S38 E14 N4 FOP=[YR=1993] E6 N7 W6 S7 $ N7 E6 S5 E12 FGR=[YR=1993] S12 E22 N22 W10 N2 W3 S3 W9 S9 $ N9 E9 N3 E3 S2 E10 N22 $ PTR=E15 FUS=[YR=1993] E13S2 E3 N2 E4 S5 W7 S10 E7 S6 W5S10 W10 N12 W5 N19 $ W15$.

EXTRA FEATURES

LN	OB/XF CODE	DESCRIPTION	BLD	CAP	L	W	UNITS	UT	Adj R	ADJ UNIT PRICE	ORIG COND	YEAR ON	YEAR ACTUAL	Q	% COND	OB/XF MKT VALUE	NOTES
1	0504	FP-ELECTRI	0	100	0	0	1.00	UT	2,000.00	2,000.00	100	1991	1991	3	72	1,440	
2	0858	SCULP CONC	0	100	0	0	123.00	SF	13.00	13.00	100	1991	1991	3	88	1,407	
3	0812	CONCRETE C	0	100	0	0	1,123.00	SF	4.00	4.00	100	1991	1991	3	64	2,875	

LAND DESCRIPTION

TOTAL OB/XF 5,722

LN	USE CODE	CLS	LAND USE DESCRIPTION	CAP	RD	LOC ZONE	FRONT	DEPTH	TOT LND UTS	UNIT TYPE	DT	DPTH FACT	% COND	TOT ADJ	UNIT PRICE	ADJ UNIT PRICE	LAND VALUE	OTHER ADJUSTMENTS AND NOTES	YEAR	DENSITY	DECL	FRZ	YR	CONSRV
1	000100	C	SFR	100			0.00	0.00	1.00	UT		1.00	1.00	1.00	200,000.00	200,000.00	200,000							

REVIEW DATE 02/16/2018 BY DJX Total Acres: 0.00 Total Land Value: 200,000 Market: 0 Agricultural: 0 Common: 200,000 PRINTED 08/02/2023 BY SYS