BLOCK 12 LOT 5
THE PARK PB 4/28

ADAMSON JOSEPHINE B
1635 LISA AVE
FERNANDINA BEACH, FL 32034

2023

00-00-31-1630-0012-0050

BUILDING CHARACTERISTICS

ELEMENT	CD	CONSTRUCTION
Exterior Wall	05	AVERAGE 50
Exterior Wall	17	CB STUCCO 50
Roof Structur	03	GABLE/HIP 100
Roof Cover	03	COMP SHNGL 100
Interior Wall	05	DRYWALL 100
Interior Floo	14	CARPET 70
Interior Floo	15	HARDTILE 30
Air Condition	03	CENTRAL 100
Heating Type	04	AIR DUCTED 100
Bedrooms		3 100
Bathrooms		2 100
Frame	02	WOOD FRAME 100
Stories	2.	2. 100
Units		0 100
BUD8 Adjustme	02	DIST FB 100
Occupancy	00	NONE 100
Quality	05	Quality Level 05
DOR CODE	0100	SINGLE FAMILY
MAP NUM		MKT AREA 01
NEIGHBORHOOD/LOC	1040.00	

AREA TYPE	TOTAL GROSS AREA	PCT OF BASE	TOT ADJ AREA	SUBAREA MARKET VALUE
BAL	157	15	24	2,859
BAS	908	100	908	108,194
FGR	624	55	343	40,870
FOP	66	30	20	2,383
FOP	88	30	26	3,098
FOP	184	30	55	6,554
FUS	1,694	100	1,694	201,850
STR	100	10	10	1,192
STR	12	10	1	119
UOP	88	20	18	2,144
TOTALS	4,203		3,155	375,937

MARKET ADJUSTMENTS

TYPE	MDL	EFF. AREA	TOT ADJ PTS	EFF. BASE RATE	REPL. COST NEW	AYB	EYB	ECON	FNCT		NORM	% COND
0900	01	3,155	108.1828	128.47	405,323	1987	2007	0	0	0	7.25	92.75

1 SNGL FAM – 100% - 2021 Heated Area: 2602 HX Base Yr 2021

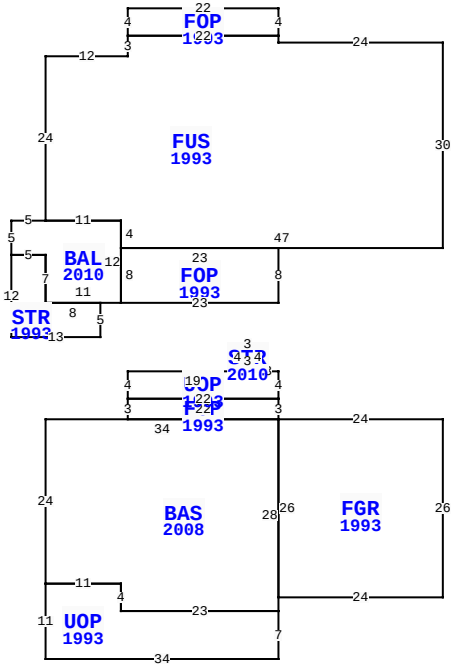

** This building has 11 Sub-Areas

1635 LISA AVE, FERNANDINA BEACH

BLD DATE		LGL DATE	
XF DATE		LAND DATE	
INC DATE		AG DATE	

NASSAU COUNTY PROPERTY

PAGE 1 of 1 2

VALUATION SUMMARY

VALUATION BY		STANDARD
Tax Group: 2	Tax Dist:	
BUILDING MARKET VALUE		375,937
TOTAL MARKET OB/XF VALUE		19,003
TOTAL LAND VALUE - MARKET		400,000
TOTAL MARKET VALUE		794,940
SOH/AGL Deduction		210,149
ASSESSED VALUE		584,791
TOTAL EXEMPTION VALUE	HX HB	50,000
BASE TAXABLE VALUE		534,791
TOTAL JUST VALUE		794,940
NCON VALUE		0
INCOME VALUE		
PREVIOUS YEAR MKT VALUE		622,614

PERMIT NUM	DESCRIPTION	AMT	ISSUED
20122526	2 STRY DECK/PERGO	10,000	12/17/2012
20101236	REMODEL	60,000	07/28/2010
20081537	REPAIR/RRF	7,200	10/03/2008
3975	NEW CONSTR	84,500	11/07/1986

SALES DATA

OFF RECORD Number	DATE	TYPE INST	Q U	V I	RSN CD	SALE PRICE
2372/0457	6/29/2020	WD	Q	I	01	630,000
GRANTOR: CATES CHARLES W & LYN						
GRANTEE: ADAMSON JOSEPHINE B						
1688/0904	7/12/2010	WD	Q	I	03	300,000
GRANTOR: HOWARD SPENCER L						
GRANTEE: CATES CHARLES W & L						

BUILDING NOTES

BUILDING DIMENSIONS

FGR=[YR=1993] W24 FOP=[YR=1993] N3 UOP=[YR=1993] N4W3 STR=[YR=2010] N4W3S4E3$ W19S4E22$ W22S3E22$ BAS=[YR=2008] W34 S24 UOP=[YR=1993] S11E34N7W23N4 W11$ E11S4E23N28$ S26 E24N26$ PTR=N25 FUS=[YR=1993] N30W24N1 FOP=[YR=1993] N4 W22S4E22$ W22S3 W12 S24 BAL=[YR=2010] W5S5 STR=[YR=1993] S12 E13N5W8N7W5$ E5S7E11 FOP=[YR=1993] E23N8W23S8$N12W11$ E11S4E47$ S25$.

EXTRA FEATURES

LN	OB/XF CODE	DESCRIPTION	BLD	CAP	L	W	UNITS	UT	Adj R	ADJ UNIT PRICE	ORIG COND	YEAR ON	YEAR ACTUAL	Q	% COND	OB/XF MKT VALUE	NOTES
1	0810	CONCRETE A	0	100	30	5	150.00	SF	6.50	6.50	100	2011	2011	3	93	907	
2	0812	CONCRETE C	0	100	0	0	1,126.00	SF	4.00	4.00	100	1987	1987	3	54.5	2,455	
3	0940	SHEDS/PORT	0	100	10	7	70.00	SF	30.00	30.00	100	2007	2007	3	35	735	
4	0961	H-SHUTTERS	0	100	0	0	8.00	UT	800.00	800.00	100	2005	2005	3	96	6,144	
5	1076	TRELLIS A	0	100	10	8	80.00	SF	7.50	7.50	100	2012	2012	3	71	426	
6	1242	WD DECK A	0	100	10	8	80.00	SF	10.00	10.00	100	2012	2012	3	60	480	
7	0855	CONC PAVER	0	100	24	15	360.00	SF	10.00	10.00	100	2013	2013	3	95	3,420	
8	1076	TRELLIS A	0	100	23	12	276.00	SF	7.50	7.50	100	2013	2013	3	75	1,553	
9	1242	WD DECK A	0	100	23	14	322.00	SF	13.50	13.50	100	2013	2013	3	65	2,826	
10	0810	CONCRETE A	0	100	4	4	16.00	SF	6.50	6.50	100	1987	1987	3	54.5	57	

TOTAL OB/XF 19,003

LAND DESCRIPTION

LN	USE CODE	CLS	LAND USE DESCRIPTION	CAP	RD	LOC ZONE	FRONT	DEPTH	TOT LND UTS	UNIT TYPE	DT	DPTH FACT	% COND	TOT ADJ	UNIT PRICE	ADJ UNIT PRICE	LAND VALUE	OTHER ADJUSTMENTS AND NOTES	YEAR	DENSITY	DECL	FRZ	YR	CONSRV
1	000100	C	SFR	100	0006	R-1	0.00	0.00	1.00	LT		1.00	1.00	1.00	400,000.00	400,000.00	400,000							

REVIEW DATE 06/01/2018 BY DJX Total Acres: 0.00 Total Land Value: 400,000 Market: 0 Agricultural: 0 Common: 400,000 PRINTED 08/02/2023 BY SYS