BLOCK 11 LOT 1
THE PARK PB 4/28

KELLY JASON S & JOANNA ELIZABETH
1531 LISA AVE
FERNANDINA BEACH, FL 32034

2023

00-00-31-1630-0011-0010

BUILDING CHARACTERISTICS

ELEMENT	CD	CONSTRUCTION
Exterior Wall	10	ABOVE AVG 60
Exterior Wall	17	CB STUCCO 40
Roof Structur	08	IRREGULAR 100
Roof Cover	11	SLATE 100
Interior Wall	05	DRYWALL 100
Interior Floo	12	HARDWOOD 80
Interior Floo	11	CLAY TILE 20
Air Condition	03	CENTRAL 100
Heating Type	04	AIR DUCTED 100
Bedrooms		5 100
Bathrooms		6.5 100
Frame	04	REIN CONC 100
Stories	3.	3. 100
Units		0 100
Quality	03	Quality Level 03

DOR CODE	0100	SINGLE FAMILY	
MAP NUM		MKT AREA	01
NEIGHBORHOOD/LOC	1040.00		

AREA TYPE	TOTAL GROSS AREA	PCT OF BASE	TOT ADJ AREA	SUBAREA MARKET VALUE
BAS	578	100	578	123,957
FGR	1,050	55	578	123,957
FOP	247	30	74	15,870
FOP	280	30	84	18,014
FOP	380	30	114	24,449
FOP	532	30	160	34,314
FSP	380	40	152	32,597
FST	30	55	16	3,432
FST	30	55	16	3,432
FST	30	55	16	3,432
TOTALS	8,040		5,839	1,252,226

MARKET ADJUSTMENTS

TYPE	MDL	EFF. AREA	TOT ADJ PTS	EFF. BASE RATE	REPL. COST NEW	AYB	EYB	ECON	FNCT		NORM	% COND
0500	11	5,839	154.6733	220.41	1,286,974	2016	2016	0	0	0	2.70	97.30

1 SFR CUST – 100% - 2017 Heated Area: 4322 HX Base Yr 2017

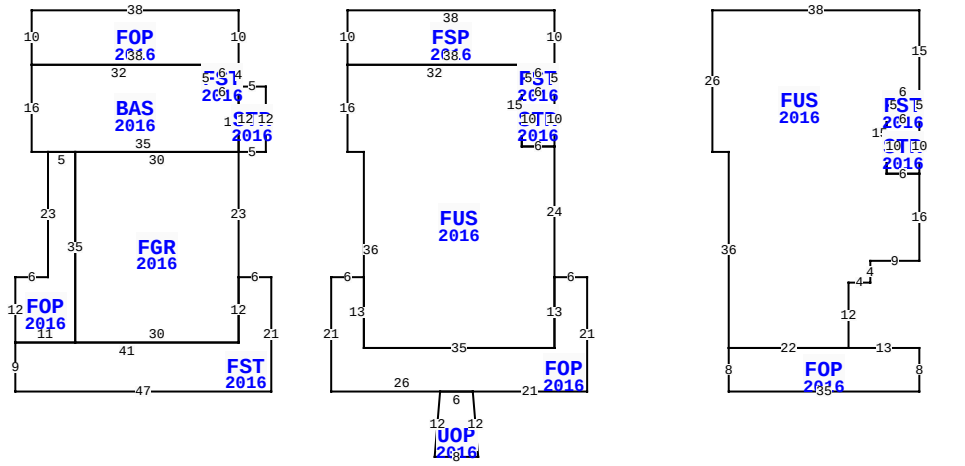

** This building has 17 Sub-Areas

1531 LISA AVE, FERNANDINA BEACH

BLD DATE		LGL DATE	
XF DATE		LAND DATE	
INC DATE		AG DATE	

NASSAU COUNTY PROPERTY

PAGE 1 of 1 2

VALUATION SUMMARY

VALUATION BY		STANDARD
Tax Group: 2	Tax Dist:	
BUILDING MARKET VALUE		1,252,226
TOTAL MARKET OB/XF VALUE		78,273
TOTAL LAND VALUE - MARKET		400,000
TOTAL MARKET VALUE		1,730,499
SOH/AGL Deduction		726,339
ASSESSED VALUE		1,004,160
TOTAL EXEMPTION VALUE	HX HB	50,000
BASE TAXABLE VALUE		954,160
TOTAL JUST VALUE		1,730,499
NCON VALUE		0
INCOME VALUE		
PREVIOUS YEAR MKT VALUE		1,409,515

PERMIT NUM	DESCRIPTION	AMT	ISSUED
20141751	CO ISSUED	0	05/18/2016
20160426	SWIM POOL	30,000	02/17/2016
20141751	NEW CONSTR	881,591	08/08/2014

SALES DATA

OFF RECORD Number	DATE	TYPE INST	Q / U	V / I	RSN CD	SALE PRICE
2512/0234	11/02/2021	WD	U	I	11	100
GRANTOR: KELLY JASON S						
GRANTEE: KELLY JASON S & JOA						
1860/1312	6/04/2013	WD	Q	V	01	190,000
GRANTOR: MORSELANDER KENNETH D						
GRANTEE: KELLY JASON S						

BUILDING NOTES

BUILDING DIMENSIONS

FOP=[YR=2016] W38 S10 BAS=[YR=2016] S16 E3 FOP=[YR=2016] S23 W6 S12 FST=[YR=2016] S9 E47 N21 W6 FGR=[YR=2016] N23 STR=[YR=2016] E5 N12 W5 FST=[YR=2016] N4 W6 S5 E6 N1$ S12$W30 S35E30 N12$ S12 W41$ E11 N35 W5$ E35 N11 W6 N5 W32$ E38 N10$ PTR= E20 FSP=[YR=2016] E38 S10 FST=[YR=2016] S5 STR=[YR=2016] S10 FUS=[YR=2016] S24 FOP=[YR=2016] E6 S21 W21UOP=[YR=2016] D12 R1 W8 U12 R1 E6$ W26 N21 E6 S13 E35 N13$ S13 W35 N36 W3N16 E32 S15 E6$ W6 N10 E6$ W6 N5 E6$ W38 N10$ W20$ PTR=E87 FUS=[YR=2016] E38 S15 FST=[YR=2016] S5 STR=[YR=2016] S10 W6 N10 E6$ W6 N5 E6$ W6 S15 E6 S16 W9 S4 W4 S12 FOP=[YR=2016] E13 S8 W35 N8 E22$ W22 N36 W3 N26$ W87$.

EXTRA FEATURES

LN	OB/XF CODE	DESCRIPTION	BLD	CAP	L	W	UNITS	UT	Adj R	ADJ UNIT PRICE	ORIG COND	YEAR ON	YEAR ACTUAL	Q	% COND	OB/XF MKT VALUE	NOTES
1	0855	CONC PAVER	0	100	0	0	1,463.00	SF	10.00	10.00	100	2016	2016	3	97	14,191	
2	0855	CONC PAVER	0	100	0	0	108.00	SF	10.00	10.00	100	2016	2016	3	97	1,048	
3	0855	CONC PAVER	0	100	0	0	1,423.00	SF	10.00	10.00	100	2016	2016	3	97	13,803	
4	0861	POOL GUNIT	0	100	0	0	522.00	SF	85.00	85.00	100	2016	2016	3	84	37,271	
5	0504	FP-ELECTRI	0	100	0	0	1.00	UT	2,000.00	2,000.00	100	2016	2016	3	98	1,960	
6	0410	ELEVATOR	0	100	0	0	1.00	UT	10,000.00	10,000.00	100	2016	2016	3	100	10,000	

LAND DESCRIPTION

TOTAL OB/XF 78,273

LN	USE CODE	CLS	LAND USE DESCRIPTION	CAP	RD	LOC ZONE	FRONT	DEPTH	TOT LND UTS	UNIT TYPE	DT	DPTH FACT	% COND	TOT ADJ	UNIT PRICE	ADJ UNIT PRICE	LAND VALUE	OTHER ADJUSTMENTS AND NOTES	YEAR	DENSITY	DECL	FRZ	YR	CONSRV
1	000100	C	SFR	100	0006	R-1	0.00	0.00	1.00	LT		1.00	1.00	1.00	400,000.00	400,000.00	400,000							

REVIEW DATE 01/14/2021 BY TWA Total Acres: 0.00 Total Land Value: 400,000 Market: 0 Agricultural: 0 Common: 400,000 PRINTED 08/02/2023 BY SYS