BLOCK 10 LOT 1
IN OR 1959/1249
ESMT IN OR 788/1183

HILKER STEPHEN E
1220 TROPICAL COVE DR
MERRITT ISLAND, FL 32952

2023

00-00-31-1630-0010-0010

BUILDING CHARACTERISTICS

ELEMENT	CD	CONSTRUCTION
Exterior Wall	05	AVERAGE 50
Exterior Wall	16	WD FR STUC 50
Roof Structur	03	GABLE/HIP 100
Roof Cover	03	COMP SHNGL 100
Interior Wall	05	DRYWALL 100
Interior Floo	13	LVT/LAMNT 50
Interior Floo	14	CARPET 50
Air Condition	03	CENTRAL 100
Heating Type	04	AIR DUCTED 100
Bedrooms		4 100
Bathrooms		4 100
Frame	02	WOOD FRAME 100
Stories	2.	2. 100
Units		0 100
BUD8 Adjustme	02	DIST FB 100
Occupancy	00	NONE 100
Quality	06	Quality Level 06
DOR CODE	0800	MULTI-FAMILY
MAP NUM		MKT AREA 01
NEIGHBORHOOD/LOC	1040.00	

AREA TYPE	TOTAL GROSS AREA	PCT OF BASE	TOT ADJ AREA	SUBAREA MARKET VALUE
BAS	792	100	792	105,769
BAS	288	100	288	38,462
DCK	16	10	2	267
DCK	32	10	3	401
DCK	32	10	3	401
DCK	40	10	4	534
DCK	210	10	21	2,805
FOP	32	30	10	1,336
FUS	1,080	100	1,080	144,230
STR	16	10	2	267
TOTALS	3,074		2,296	306,623

MARKET ADJUSTMENTS

TYPE	MDL	EFF. AREA	TOT ADJ PTS	EFF. BASE RATE	REPL. COST NEW	AYB	EYB	ECON	FNCT		NORM	% COND
2700	01	2,296	125.6605	149.85	344,056	1982	2000	0	0	0	10.88	89.12

1 DUPLEX – 0% - 0 Heated Area: 2160 HX Base Yr

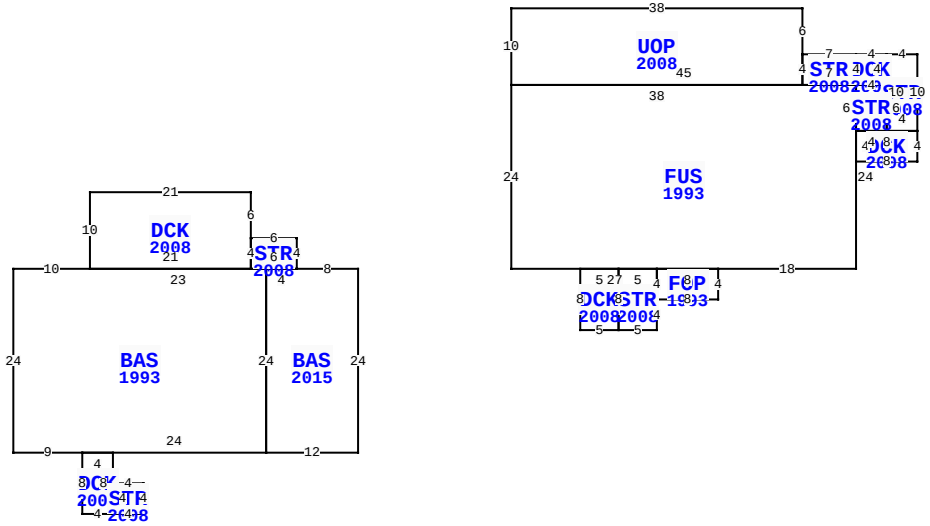

** This building has 16 Sub-Areas

1530 LISA AVE, FERNANDINA BEACH

BLD DATE	02/25/2014 DJ	LGL DATE	
XF DATE		LAND DATE	
INC DATE		AG DATE	

NASSAU COUNTY PROPERTY

PAGE 1 of 1 2

VALUATION SUMMARY

VALUATION BY	STANDARD
Tax Group: 2	Tax Dist:
BUILDING MARKET VALUE	306,623
TOTAL MARKET OB/XF VALUE	1,156
TOTAL LAND VALUE - MARKET	400,000
TOTAL MARKET VALUE	707,779
SOH/AGL Deduction	187,860
ASSESSED VALUE	519,919
TOTAL EXEMPTION VALUE	0
BASE TAXABLE VALUE	519,919
TOTAL JUST VALUE	707,779
NCON VALUE	0
INCOME VALUE	
PREVIOUS YEAR MKT VALUE	518,223

PERMIT NUM	DESCRIPTION	AMT	ISSUED
20121566	H/AC	2,800	08/02/2012
20081305	10X40 DECK	8,000	08/18/2008
20081220	REPLACE ALL WINDO	6,000	07/31/2008
20062234	REPLACE AIR HANDL	1,500	09/26/2006
20010680	WIRE SMOKE ALARMS	0	04/17/2001
2004610	FOUNDATION REPAIR	21,000	01/08/2001

SALES DATA

OFF RECORD Number	DATE	TYPE INST	Q / U	V / I	RSN CD	SALE PRICE
1959/1249	1/26/2015	WD	Q	I	01	337,500
GRANTOR: ENGLISH ROBERT & ELIZ						
GRANTEE: HILKER STEPHEN E						
1001/1314	8/07/2001	WD	Q	I		270,000
GRANTOR: EMERY ALPHEUS W & BET						
GRANTEE: ENGLISH ROBERT & EL						

BUILDING NOTES

BUILDING DIMENSIONS

BAS=[YR=2015] W8 STR=[YR=2008] N4 W6 DCK=[YR=2008] N6 W21 S10 BAS=[YR=1993] W10 S24 E9 DCK=[YR=2008] S8 E4 STR=[YR=2008] E4 N4 W4 S4$ N8 W4$ E24 N24 W23$ E21 N4$ S4 E6$ W4 S24 E12 N24$ PTR=E20 FUS=[YR=1993] N24 UOP=[YR=2008] N10 E38 S6 STR=[YR=2008] E7 DCK=[YR=2008] E4 STR=[YR=2008] E4 S10 DCK=[YR=2008] S4 W8 N4 STR=[YR=2008] N6 E4 S6 W4$ E8$ W4 N10$ S4 W4 N4$ S4 W7 N4$ S4 W38$ E45 S24 W18 FOP=[YR=1993] S4 W8 STR=[YR=2008] S4 W5 DCK=[YR=2008] W5 N8 E5 S8$ N8 E5 S4$ N4 E8$ W27$ W20$.

EXTRA FEATURES

LN	OB/XF CODE	DESCRIPTION	BLD	CAP	L	W	UNITS	UT	Adj R	ADJ UNIT PRICE	ORIG COND	YEAR ON	YEAR ACTUAL	Q	% COND	OB/XF MKT VALUE	NOTES
1	0810	CONCRETE A	0	0	38	9	342.00	SF	6.50	6.50	100	1982	1982	3	41	911	
2	0810	CONCRETE A	0	0	0	0	92.00	SF	6.50	6.50	100	1982	1982	3	41	245	

LAND DESCRIPTION

TOTAL OB/XF 1,156

LN	USE CODE	CLS	LAND USE DESCRIPTION	CAP	RD	LOC ZONE	FRONT	DEPTH	TOT LND UTS	UNIT TYPE	DT	DPTH FACT	% COND	TOT ADJ	UNIT PRICE	ADJ UNIT PRICE	LAND VALUE	OTHER ADJUSTMENTS AND NOTES	YEAR	DENSITY	DECL	FRZ	YR	CONSRV
1	000800	C	MULTI-FAM	0	0006	R-1	0.00	0.00	1.00	LT		1.00	1.00	1.00	400,000.00	400,000.00	400,000							

REVIEW DATE 01/14/2021 BY TWA Total Acres: 0.00 Total Land Value: 400,000 Market: 0 Agricultural: 0 Common: 400,000 PRINTED 08/02/2023 BY SYS