LOT 2 (EX S-1)
IN OR 729/165
RED BAY FOREST PB 5/138

AUSTIN DAVID BERT
P O BOX 15602
FERNANDINA BEACH, FL 32035

2023

00-00-31-1616-0002-0000

BUILDING CHARACTERISTICS

ELEMENT	CD	CONSTRUCTION
Exterior Wall	08	WD ON PLY 50
Exterior Wall	12	CEDAR 50
Roof Structur	03	GABLE/HIP 100
Roof Cover	12	MODULAR MT 100
Interior Wall	05	DRYWALL 100
Interior Floo	12	HARDWOOD 100
Air Condition	02	WINDOW 100
Heating Type	03	FORCED AIR 100
Bedrooms		6 100
Bathrooms		4 100
Frame	02	WOOD FRAME 100
Stories	1.5	1.5 100
Units		0 100
Occupancy	00	NONE 100
Quality	02	Quality Level 02

DOR CODE 0800 MULTI-FAMILY
MAP NUM | MKT AREA 01
NEIGHBORHOOD/LOC 1001.00

AREA TYPE	TOTAL GROSS AREA	PCT OF BASE	TOT ADJ AREA	SUBAREA MARKET VALUE
APT	264	100	264	21,062
APT	576	100	576	45,954
APT	1,512	100	1,512	120,629
HXB	2,160	100	2,160	172,328
UEP	256	60	154	12,286
UOP	24	20	5	399
USP	48	30	14	1,117
USP	156	30	47	3,750
TOTALS	4,996		4,732	377,525

MARKET ADJUSTMENTS

TYPE	MDL	EFF. AREA	TOT ADJ PTS	EFF. BASE RATE	REPL. COST NEW	AYB	EYB	ECON	FNCT		NORM	% COND
2801	01	4,732	83.3340	92.50	437,710	1995	2000	0	0	0	13.75	86.25

1 QUAD PLEX – 0% - 0 Heated Area: 4512 HX Base Yr

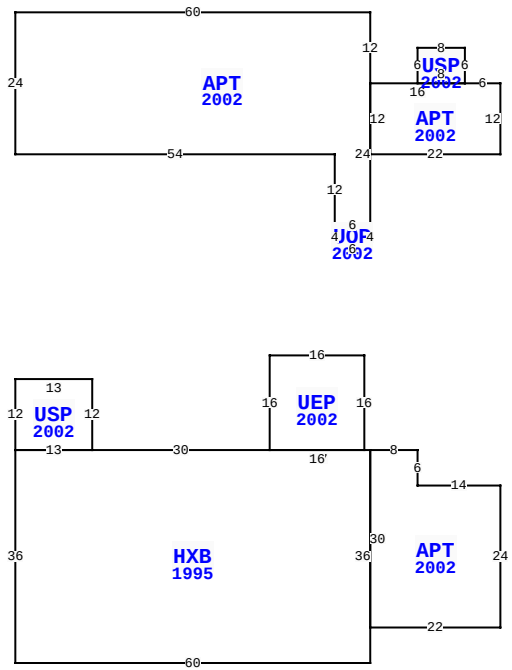

522 CITRONA DR, FERNANDINA BEACH

BLD DATE		LGL DATE	
XF DATE		LAND DATE	
INC DATE		AG DATE	

NASSAU COUNTY PROPERTY

PAGE 1 of 1 2

VALUATION SUMMARY

VALUATION BY		STANDARD
Tax Group: 2	Tax Dist:	
BUILDING MARKET VALUE		377,525
TOTAL MARKET OB/XF VALUE		7,881
TOTAL LAND VALUE - MARKET		180,000
TOTAL MARKET VALUE		565,406
SOH/AGL Deduction		164,185
ASSESSED VALUE		401,221
TOTAL EXEMPTION VALUE	35	376,245
BASE TAXABLE VALUE		24,976
TOTAL JUST VALUE		565,406
NCON VALUE		0
INCOME VALUE		
PREVIOUS YEAR MKT VALUE		491,503

PERMIT NUM	DESCRIPTION	AMT	ISSUED
20111092	REPAIR/RRF	2,000	07/06/2011
20111090	REPAIR/RRF	250	07/05/2011
8381	GARAGE	2,000	06/13/1994
8361	ADDITION	1,000	06/01/1994
7686	NEW CONSTR	3,000	05/06/1993
6800	NEW CONSTR	0	11/11/1991

SALES DATA

OFF RECORD Number	DATE	TYPE INST	Q U	V I	RSN CD	SALE PRICE
0729/0165	5/05/1995	WD	U	I	06	25,000
GRANTOR: PARSONS WILLARD & PAT						
GRANTEE: AUSTIN DAVID BERT						
0707/1982	6/24/1994	WD	U	V	06	12,000
GRANTOR: AUSTIN DAVID BERT 1/2						
GRANTEE: PARSONS WILLARD & P						

BUILDING NOTES

BUILDING DIMENSIONS

APT=[YR=2002] W6 USP=[YR=2002] N6 W8 S6 E8 $ W16
APT=[YR=2002] N12 W60 S24 E54 S12 UOP=[YR=2002] S4 E6 N4 W6 $ E6 N24 $ S12 E22 N12 $ PTR= S50W82 USP=[YR=2002] E13 S12
HXB=[YR=1995] E30 UEP=[YR=2002] N16 E16 S16 W16 $E17
APT=[YR=2002] E8 S6 E14 S24 W22N30 $ S36 W60 N36 E13 $ W13 N12 $ E82N50 $.

EXTRA FEATURES

LN	OB/XF CODE	DESCRIPTION	BLD	CAP	L	W	UNITS	UT	Adj R	ADJ UNIT PRICE	ORIG COND	YEAR ON	YEAR ACTUAL	Q	% COND	OB/XF MKT VALUE	NOTES
1	0510	GARAGE WD-	0	0	36	16	576.00	SF	53.90	53.90	100	1994	1994	3	23	7,141	
3	1243	WD DECK F	0	0	6	12	72.00	SF	8.00	8.00	100	2002	2002	3	21	121	
4	1241	WD DECK G	0	0	26	4	104.00	UT	11.50	11.50	100	2002	2002	3	32	383	
5	1241	WD DECK G	0	0	16	4	64.00	UT	11.50	11.50	100	2002	2002	3	32	236	

LAND DESCRIPTION

TOTAL OB/XF 7,881

LN	USE CODE	CLS	LAND USE DESCRIPTION	CAP	RD	LOC ZONE	FRONT	DEPTH	TOT LND UTS	UNIT TYPE	DT	DPTH FACT	% COND	TOT ADJ	UNIT PRICE	ADJ UNIT PRICE	LAND VALUE	OTHER ADJUSTMENTS AND NOTES	YEAR	DENSITY	DECL	FRZ	YR	CONSRV
1	000800	C	MULTI-FAM	0	0006	R-1	0.00	0.00	1.20	UT		1.00	1.00	1.00	150,000.00	150,000.00	180,000							

REVIEW DATE 10/17/2017 BY DJ Total Acres: 0.00 Total Land Value: 180,000 Market: 0 Agricultural: 0 Common: 180,000 PRINTED 08/02/2023 BY SYS