LOT 9
IN OR 2197/636
COASTAL COTTAGES PBK 8/161

IRWIN SERVICES LLC
481 JASMINE WAY
LIZELLA, GA 31052

2023

00-00-31-1612-0009-0000

NASSAU COUNTY PROPERTY

BUILDING CHARACTERISTICS

ELEMENT	CD	CONSTRUCTION
Exterior Wall	10	ABOVE AVG 100
Roof Structur	08	IRREGULAR 100
Roof Cover	03	COMP SHNGL 100
Interior Wall	05	DRYWALL 100
Interior Floo	12	HARDWOOD 60
Interior Floo	14	CARPET 40
Air Condition	03	CENTRAL 100
Heating Type	04	AIR DUCTED 100
Bedrooms		3 100
Bathrooms		2.5 100
Frame	02	WOOD FRAME 100
Stories	1.5	1.5 100
Units		0 100
Quality	06	Quality Level 06

DOR CODE 0100 SINGLE FAMILY
MAP NUM | MKT AREA 01
NEIGHBORHOOD/LOC 1211.00

AREA TYPE	TOTAL GROSS AREA	PCT OF BASE	TOT ADJ AREA	SUBAREA MARKET VALUE
BAS	1,242	100	1,242	183,742
FGR	529	55	291	43,050
FOP	77	30	23	3,403
FOP	110	30	33	4,882
FUS	594	100	594	87,877
STR	36	10	4	592
TOTALS	2,588		2,187	323,547

MARKET ADJUSTMENTS

TYPE	MDL	EFF. AREA	TOT ADJ PTS	EFF. BASE RATE	REPL. COST NEW	AYB	EYB	ECON	FNCT		NORM	% COND
0320	11	2,187	158.9070	150.96	330,150	2017	2017	0	0	0	2.00	98.00

1 TOWNHOUSE - 0% - 0 Heated Area: 1836 HX Base Yr

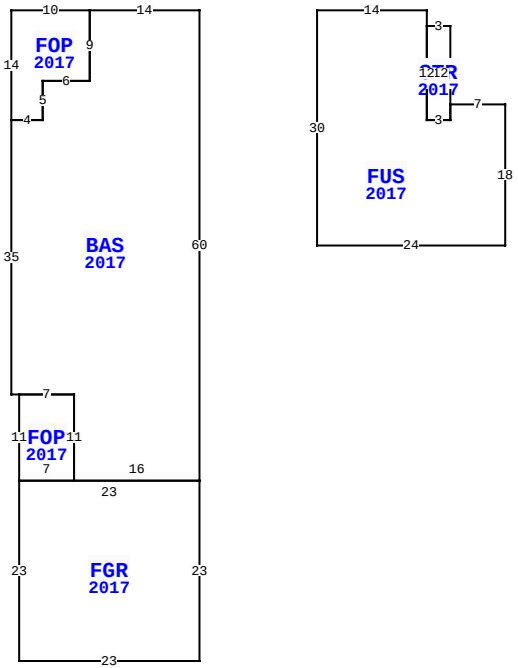

1560 NECTARINE ST, FERNANDINA BEACH

BLD DATE		LGL DATE	
XF DATE		LAND DATE	
INC DATE		AG DATE	

NASSAU COUNTY PROPERTY — VALUATION SUMMARY

VALUATION BY	STANDARD
Tax Group: 2	Tax Dist:
BUILDING MARKET VALUE	323,547
TOTAL MARKET OB/XF VALUE	3,564
TOTAL LAND VALUE - MARKET	100,000
TOTAL MARKET VALUE	427,111
SOH/AGL Deduction	90,702
ASSESSED VALUE	336,409
TOTAL EXEMPTION VALUE	0
BASE TAXABLE VALUE	336,409
TOTAL JUST VALUE	427,111
NCON VALUE	0
INCOME VALUE	
PREVIOUS YEAR MKT VALUE	355,722

PERMIT NUM	DESCRIPTION	AMT	ISSUED
20170935	CO ISSUED	0	02/02/2018
20170935	NEW CONSTR	236,030	03/29/2017

SALES DATA

OFF RECORD Number	DATE	TYPE INST	Q U	V I	RSN CD	SALE PRICE
2197/0636	5/18/2018	WD	Q	I	02	300,000
GRANTOR: W R HOWELL COMPANY						
GRANTEE: IRWIN SERVICES LLC						
2102/1202	2/13/2017	WD	U	V	37	50,000
GRANTOR: COTTAGES AT COASTAL O						
GRANTEE: W R HOWELL COMPANY						

BUILDING NOTES

BUILDING DIMENSIONS

BAS=[YR=2017] W14 FOP=[YR=2017] W10 S14 E4 N5 E6 N9$ S9 W6 S5 W4 S35 E1 FOP=[YR=2017] S11 FGR=[YR=2017] S23 E23 N23 W23$ E7 N11 W7$ E7 S11 E16 N60$ PTR=E15 FUS=[YR=2017] E14 S2 STR=[YR=2017] E3 S12 W3 N12$ S12 E3 N2 E7 S18 W24 N30$ W15$.

EXTRA FEATURES

LN	OB/XF CODE	DESCRIPTION	BLD	CAP	L	W	UNITS	UT	Adj R	ADJ UNIT PRICE	ORIG COND	YEAR ON	YEAR ACTUAL	Q	% COND	OB/XF MKT VALUE	NOTES
1	0855	CONC PAVER	0	0	0	0	342.00	SF	7.00	7.00	100	2014	2014	3	95	2,274	
2	0855	CONC PAVER	0	0	0	0	148.00	SF	7.00	7.00	100	2017	2017	3	97	1,005	
3	0855	CONC PAVER	0	0	14	3	42.00	SF	7.00	7.00	100	2017	2017	3	97	285	

LAND DESCRIPTION

TOTAL OB/XF 3,564

LN	USE CODE	CLS	LAND USE DESCRIPTION	CAP	RD	LOC ZONE	FRONT	DEPTH	TOT LND UTS	UNIT TYPE	DT	DPTH FACT	% COND	TOT ADJ	UNIT PRICE	ADJ UNIT PRICE	LAND VALUE	OTHER ADJUSTMENTS AND NOTES	YEAR	DENSITY	DECL	FRZ	YR	CONSRV
1	000100	C	SFR	0			0.00	0.00	1.00	LT		1.00	1.00	1.00	100,000.00	100,000.00	100,000							

REVIEW DATE 11/17/2017 BY DJ Total Acres: 0.00 Total Land Value: 100,000 Market: 0 Agricultural: 0 Common: 100,000 PRINTED 08/02/2023 BY SYS