LOT 2
COASTAL COTTAGES PBK 8/161

SERGENT ROBERT S
1431 COASTAL OAKS DRIVE
FERNANDINA BEACH, FL 32034

2023

00-00-31-1612-0002-0000

BUILDING CHARACTERISTICS

ELEMENT	CD	CONSTRUCTION
Exterior Wall	10	ABOVE AVG 100
Roof Structur	08	IRREGULAR 100
Roof Cover	03	COMP SHNGL 100
Interior Wall	05	DRYWALL 100
Interior Floo	12	HARDWOOD 60
Interior Floo	14	CARPET 40
Air Condition	03	CENTRAL 100
Heating Type	04	AIR DUCTED 100
Bedrooms		3 100
Bathrooms		2.5 100
Frame	02	WOOD FRAME 100
Stories	1.5	1.5 100
Units		0 100
Quality	06	Quality Level 06
DOR CODE	0100	SINGLE FAMILY
MAP NUM		MKT AREA 01
NEIGHBORHOOD/LOC	1211.00	

AREA TYPE	TOTAL GROSS AREA	PCT OF BASE	TOT ADJ AREA	SUBAREA MARKET VALUE
BAS	1,242	100	1,242	185,617
FGR	529	55	291	43,490
FOP	77	30	23	3,437
FOP	110	30	33	4,932
FUS	594	100	594	88,773
STR	36	10	4	598
TOTALS	2,588		2,187	326,848

MARKET ADJUSTMENTS

TYPE	MDL	EFF. AREA	TOT ADJ PTS	EFF. BASE RATE	REPL. COST NEW	AYB	EYB	ECON	FNCT		NORM	% COND
0320	11	2,187	158.9070	150.96	330,150	2019	2019	0	0	0	1.00	99.00

1 TOWNHOUSE – 100% - 2020 Heated Area: 1836 HX Base Yr 2020

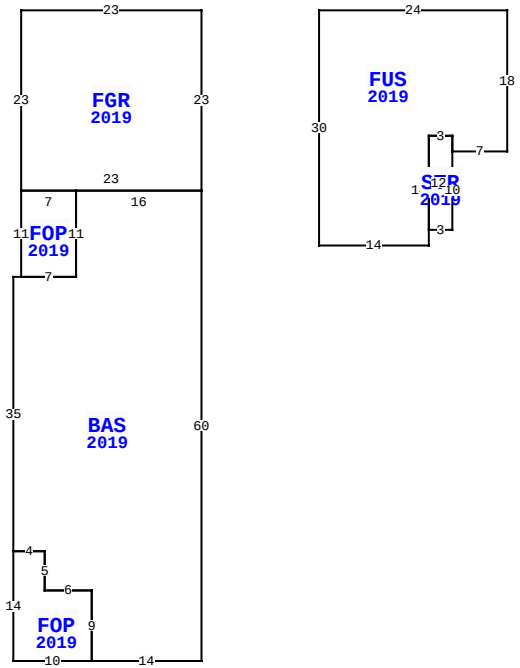

1431 COASTAL OAKS DR, FERNANDINA BEACH

BLD DATE		LGL DATE	
XF DATE		LAND DATE	
INC DATE		AG DATE	

NASSAU COUNTY PROPERTY

PAGE 1 of 1 2

VALUATION SUMMARY

VALUATION BY		STANDARD
Tax Group: 2	Tax Dist:	
BUILDING MARKET VALUE		326,848
TOTAL MARKET OB/XF VALUE		3,264
TOTAL LAND VALUE - MARKET		100,000
TOTAL MARKET VALUE		430,112
SOH/AGL Deduction		141,921
ASSESSED VALUE		288,191
TOTAL EXEMPTION VALUE	HX HB VX WR	60,000
BASE TAXABLE VALUE		228,191
TOTAL JUST VALUE		430,112
NCON VALUE		0
INCOME VALUE		
PREVIOUS YEAR MKT VALUE		358,112

PERMIT NUM	DESCRIPTION	AMT	ISSUED
20183036	CO ISSUED	0	03/27/2019
20183036	NEW CONSTR	248,719	08/30/2018

SALES DATA

OFF RECORD Number	DATE	TYPE INST	Q / U	V / I	RSN CD	SALE PRICE
2265/0427	3/28/2019	WD	Q	I	02	335,700
GRANTOR: W R HOWELL COMPANY						
GRANTEE: SERGENT ROBERT S &						
2222/0072	8/24/2018	WD	U	V	30	50,000
GRANTOR: COTTAGES AT COASTAL O						
GRANTEE: W R HOWELL COMPANY						

BUILDING NOTES

BUILDING DIMENSIONS

FGR=[YR=2019] W23 S23 FOP=[YR=2019] S11 BAS=[YR=2019] W1 S35 FOP=[YR=2019] S14 E10 N9 W6 N5 W4$ E4 S5 E6 S9 E14 N60 W16 S11 W7$ E7 N11 W7$ E23 N23$ PTR=E15 FUS=[YR=2019] E24 S18 W7 STR=[YR=2019] S10 W3 N12 E3 S2$ N2 W3 S14 W14 N30$ W15$.

EXTRA FEATURES

LN	OB/XF CODE	DESCRIPTION	BLD	CAP	L	W	UNITS	UT	Adj R	ADJ UNIT PRICE	ORIG COND	YEAR ON	YEAR ACTUAL	Q	% COND	OB/XF MKT VALUE	NOTES
1	0855	CONC PAVER	0	100	0	0	342.00	SF	7.00	7.00	100	2019	2019	3	99	2,370	
2	0855	CONC PAVER	0	100	0	0	129.00	SF	7.00	7.00	100	2019	2019	3	99	894	

LAND DESCRIPTION

TOTAL OB/XF 3,264

LN	USE CODE	CLS	LAND USE DESCRIPTION	CAP	RD	LOC ZONE	FRONT	DEPTH	TOT LND UTS	UNIT TYPE	DT	DPTH FACT	% COND	TOT ADJ	UNIT PRICE	ADJ UNIT PRICE	LAND VALUE	OTHER ADJUSTMENTS AND NOTES	YEAR	DENSITY	DECL	FRZ	YR	CONSRV
1	000100	C	SFR	100			0.00	0.00	1.00	LT		1.00	1.00	1.00	100,000.00	100,000.00	100,000							

REVIEW DATE 06/04/2019 BY DJ Total Acres: 0.00 Total Land Value: 100,000 Market: 0 Agricultural: 0 Common: 100,000 PRINTED 08/02/2023 BY SYS