BLK 7 LOT 10
OLD TOWN S/D UNR

BOSWORTH DAVID & HOPE
919 STEWART DRIVE
DALLAS, TX 75208

2023

00-00-31-1580-0007-0100

BUILDING CHARACTERISTICS

ELEMENT	CD	CONSTRUCTION
Exterior Wall	10	ABOVE AVG 100
Roof Structur	03	GABLE/HIP 100
Roof Cover	12	MODULAR MT 100
Interior Wall	05	DRYWALL 100
Interior Floo	12	HARDWOOD 100
Air Condition	03	CENTRAL 100
Heating Type	04	AIR DUCTED 100
Bedrooms		3 100
Bathrooms		3.5 100
Frame	02	WOOD FRAME 100
Stories	2.	2. 100
Units		0 100
Quality	04	Quality Level 04
DOR CODE	0100	SINGLE FAMILY
MAP NUM		MKT AREA 01
NEIGHBORHOOD/LOC	1003.00	

AREA TYPE	TOTAL GROSS AREA	PCT OF BASE	TOT ADJ AREA	SUBAREA MARKET VALUE
BAS	1,345	100	1,345	397,328
FDC	360	35	126	37,222
FOP	24	30	7	2,068
FOP	224	30	67	19,793
FST	48	55	26	7,681
FUS	618	100	618	182,564
STP	18	10	2	591
STR	16	10	2	591
STR	72	10	7	2,068
TOTALS	2,725		2,200	649,905

MARKET ADJUSTMENTS

TYPE	MDL	EFF. AREA	TOT ADJ PTS	EFF. BASE RATE	REPL. COST NEW	AYB	EYB	ECON	FNCT		NORM	% COND
0500	12	2,200	210.4648	299.91	659,802	2018	2018	0	0	0	1.50	98.50

1 SFR CUST – 0% - 2023 Heated Area: 1963 HX Base Yr

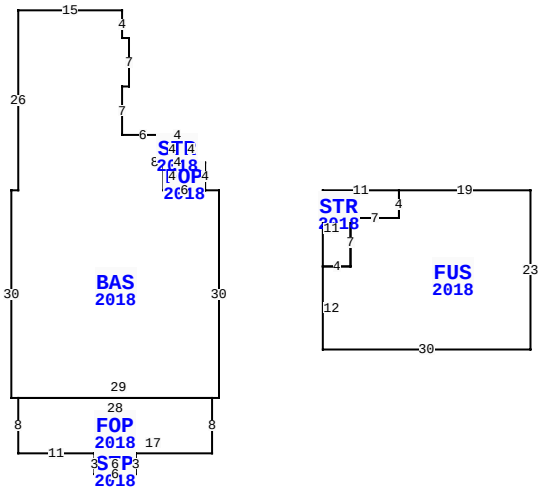

907 SAN FERNANDO ST, FERNANDINA BEACH

BLD DATE		LGL DATE	
XF DATE		LAND DATE	
INC DATE		AG DATE	

NASSAU COUNTY PROPERTY

PAGE 1 of 1 2

VALUATION SUMMARY

VALUATION BY	STANDARD
Tax Group: 2	Tax Dist:
BUILDING MARKET VALUE	649,905
TOTAL MARKET OB/XF VALUE	13,861
TOTAL LAND VALUE - MARKET	163,100
TOTAL MARKET VALUE	826,866
SOH/AGL Deduction	0
ASSESSED VALUE	826,866
TOTAL EXEMPTION VALUE	0
BASE TAXABLE VALUE	826,866
TOTAL JUST VALUE	826,866
NCON VALUE	0
INCOME VALUE	
PREVIOUS YEAR MKT VALUE	568,733

PERMIT NUM	DESCRIPTION	AMT	ISSUED
20172111	CO ISSUED	0	10/23/2018
20172267	GARAGE	9,106	07/25/2017
20172111	NEW CONSTR	222,743	07/11/2017

SALES DATA

OFF RECORD Number	DATE	TYPE INST	Q U	V I	RSN CD	SALE PRICE
2611/0055	12/30/2022	WD	Q	I	01	1,100,000
GRANTOR: BLACK TIM & MARY						
GRANTEE: BOSWORTH DAVID & HO						
2569/0140	6/08/2022	WD	Q	I	05	1,300,000
GRANTOR: CAMPBELL KERRIE LEE						
GRANTEE: BLACK TIM & MARY (H						

BUILDING NOTES

BUILDING DIMENSIONS

BAS=[YR=2018] W2 FOP=[YR=2018] N4 W2 STR=[YR=2018] N4W4S4E4$ W4S4E6$ W6N8 W6 N7 E1 N7 W1 N4 W15 S26 W1 S30 E1 FOP=[YR=2018] S8 E11 STP=[YR=2018] S3E6N3W6$ E17 N8 W28$ E29 N30$ PTR=E15 STR=[YR=2018] E11 FUS=[YR=2018] E19 S23 W30 N12E4 N7 E7 N4$ S4 W7 S7 W4 N11$ W15$ PTR=E15 S50 FST=[YR=2018] E4 FDC=[YR=2018] E20 S18W20 N18$ S12 W4 N12$ N50W15$.

EXTRA FEATURES

LN	OB/XF CODE	DESCRIPTION	BLD	CAP	L	W	UNITS	UT	Adj R	ADJ UNIT PRICE	ORIG COND	YEAR ON	YEAR ACTUAL	Q	% COND	OB/XF MKT VALUE	NOTES
1	0504	FP-ELECTRI	0	0	0	0	1.00	UT	2,000.00	2,000.00	100	2018	2018	3	99	1,980	
2	0825	BRICK	0	0	0	0	876.00	SF	12.50	12.50	100	2018	2018	3	99	10,841	
3	0825	BRICK	0	0	0	0	84.00	SF	12.50	12.50	100	2018	2018	3	99	1,040	

LAND DESCRIPTION

TOTAL OB/XF 13,861

LN	USE CODE	CLS	LAND USE DESCRIPTION	CAP	RD	LOC ZONE	FRONT	DEPTH	TOT LND UTS	UNIT TYPE	DT	DPTH FACT	% COND	TOT ADJ	UNIT PRICE	ADJ UNIT PRICE	LAND VALUE	OTHER ADJUSTMENTS AND NOTES	YEAR	DENSITY	DECL	FRZ	YR	CONSRV
1	000100	C	SFR	0	0010		46.00	93.00	46.60	FF		1.00	1.00	1.00	3,500.00	3,500.00	163,100							

REVIEW DATE 12/26/2022 BY TWA Total Acres: 0.00 Total Land Value: 163,100 Market: 0 Agricultural: 0 Common: 163,100 PRINTED 08/02/2023 BY SYS