BLK 1 LOTS 7,9 & 10
PT OR 2165/1818
OLD TOWN S/D UNR

OLD TOWN PROPERTIES LLC
112 NORTH 6TH ST
FERNANDINA BEACH, FL 32034

2023

00-00-31-1580-0001-0070

BUILDING CHARACTERISTICS

ELEMENT	CD	CONSTRUCTION
Exterior Wall	17	CB STUCCO 100
Roof Structur	03	GABLE/HIP 100
Roof Cover	03	COMP SHNGL 100
Interior Wall	05	DRYWALL 80
Interior Wall	04	PLYWOOD 20
Interior Floo	14	CARPET 80
Interior Floo	08	SHT VINYL 20
Air Condition	03	CENTRAL 100
Heating Type	04	AIR DUCTED 100
Bedrooms		5 100
Bathrooms		3 100
Frame	02	WOOD FRAME 100
Stories	1.5	1.5 100
Units		0 100
Occupancy	00	NONE 100
Quality	03	Quality Level 03
DOR CODE	0800	MULTI-FAMILY
MAP NUM		MKT AREA 01
NEIGHBORHOOD/LOC	1003.00	

AREA TYPE	TOTAL GROSS AREA	PCT OF BASE	TOT ADJ AREA	SUBAREA MARKET VALUE
APT	900	100	900	59,503
APT	1,144	100	1,144	75,634
BAS	1,313	100	1,313	86,807
FOP	390	30	117	7,735
PTO	1,258	5	63	4,165
TOTALS	5,005		3,537	233,845

MARKET ADJUSTMENTS

TYPE	MDL	EFF. AREA	TOT ADJ PTS	EFF. BASE RATE	REPL. COST NEW	AYB	EYB	ECON	FNCT	UC	NORM	% COND
2800	01	3,537	95.4000	110.19	389,742	1900	1975	0	0	60	23.50	60.00

1 TRI PLEX – 0% - 0 Heated Area: 3357 HX Base Yr

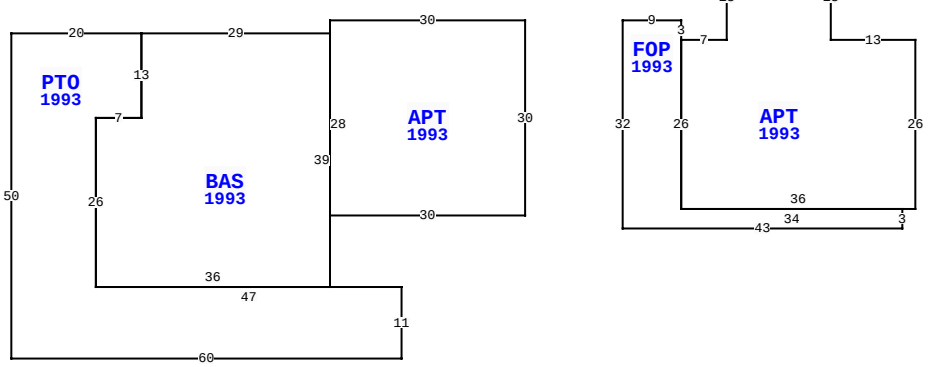

708 SAN FERNANDO ST, FERNANDINA BEACH

BLD DATE		LGL DATE	
XF DATE		LAND DATE	
INC DATE		AG DATE	

NASSAU COUNTY PROPERTY

PAGE 1 of 1 2

VALUATION SUMMARY

VALUATION BY	STANDARD
Tax Group: 2	Tax Dist:
BUILDING MARKET VALUE	233,845
TOTAL MARKET OB/XF VALUE	3,610
TOTAL LAND VALUE - MARKET	554,540
TOTAL MARKET VALUE	791,995
SOH/AGL Deduction	210,828
ASSESSED VALUE	581,167
TOTAL EXEMPTION VALUE	0
BASE TAXABLE VALUE	581,167
TOTAL JUST VALUE	791,995
NCON VALUE	0
INCOME VALUE	
PREVIOUS YEAR MKT VALUE	656,098

PERMIT NUM	DESCRIPTION	AMT	ISSUED
20222275	REMODEL	0	06/29/2022
20112284	OTHER	730	12/27/2011
20111651	H/AC	3,000	09/20/2011
20070181	REPAIR/RRF	8,325	01/31/2007
20041091	H/AC	2,000	06/14/2004
20033259	REPAIR/RRF	1,000	06/16/2003

SALES DATA

OFF RECORD Number	DATE	TYPE INST	Q U	V I	RSN CD	SALE PRICE
2165/1818	12/21/2017	SW	U	I	11	100
GRANTOR: KAVANAUGH ANNE B						
GRANTEE: OLD TOWN PROPERTIES						
0682/1934	6/16/1993	WD	U	I	07	100
GRANTOR: CITIBANK F S B						
GRANTEE: KAVANAUGH ANNE B						

BUILDING NOTES

BUILDING DIMENSIONS

APT=[YR=1993] W30 S2 BAS=[YR=1993] W29 PTO=[YR=1993] W20 S50 E60 N11 W47 N26 E7 N13 $ S13 W7 S26 E36 N39 $ S28 E30 N30 $ PTR= E15 FOP=[YR=1993] E9 S3 APT=[YR=1993] E7 N13 E16 S13 E13 S26 W36 N26 $ S26 E34 S3 W43 N32 $ W15 $.

EXTRA FEATURES

LN	OB/XF CODE	DESCRIPTION	BLD	CAP	L	W	UNITS	UT	Adj R	ADJ UNIT PRICE	ORIG COND	YEAR ON	YEAR ACTUAL	Q	% COND	OB/XF MKT VALUE	NOTES
1	0504	FP-ELECTRI	0	0	0	0	1.00	UT	2,000.00	2,000.00	100	1975	1975	3	38	760	
2	0810	CONCRETE A	0	0	0	0	439.00	SF	6.50	6.50	100	1975	1975	3	27	770	
3	1131	REINFR 8	0	0	64	7	448.00	SF	6.30	6.30	100	1975	1975	3	67.5	1,905	
4	1241	WD DECK G	0	0	19	4	76.00	UT	11.50	11.50	100	1975	1975	3	20	175	

LAND DESCRIPTION

TOTAL OB/XF 3,610

LN	USE CODE	CLS	LAND USE DESCRIPTION	CAP	RD	LOC ZONE	FRONT	DEPTH	TOT LND UTS	UNIT TYPE	DT	DPTH FACT	% COND	TOT ADJ	UNIT PRICE	ADJ UNIT PRICE	LAND VALUE	OTHER ADJUSTMENTS AND NOTES	YEAR	DENSITY	DECL	FRZ	YR	CONSRV
1	000800	C	MULTI-FAM	0	0010		47.00	93.00	46.60	FF		1.00	1.00	1.70	3,500.00	5,950.00	277,270							
2	000130	C	SFR WATER	0	0010		47.00	93.00	46.60	FF		1.00	1.00	1.70	3,500.00	5,950.00	277,270							

REVIEW DATE 07/20/2023 BY TW Total Acres: 0.00 Total Land Value: 554,540 Market: 0 Agricultural: 0 Common: 554,540 PRINTED 08/02/2023 BY SYS