LOT 44 IN OR 790/459
OCEAN VIEW ESTATES PB 6/25-26

WINKLER KENNETH H & LOIS C
866 LAGUNA DR
FERNANDINA BEACH, FL 32034

2023

00-00-31-156E-0044-0000

BUILDING CHARACTERISTICS

ELEMENT	CD	CONSTRUCTION
Exterior Wall	16	WD FR STUC 100
Roof Structur	08	IRREGULAR 100
Roof Cover	03	COMP SHNGL 100
Interior Wall	05	DRYWALL 100
Interior Floo	14	CARPET 60
Interior Floo	11	CLAY TILE 40
Air Condition	03	CENTRAL 100
Heating Type	04	AIR DUCTED 100
Bedrooms		4 100
Bathrooms		2.5 100
Frame	02	WOOD FRAME 100
Stories	2.	2. 100
Units		0 100
Occupancy	00	NONE 100
Quality	05	Quality Level 05
DOR CODE	0100	SINGLE FAMILY
MAP NUM		MKT AREA 01
NEIGHBORHOOD/LOC	1081.00	

AREA TYPE	TOTAL GROSS AREA	PCT OF BASE	TOT ADJ AREA	SUBAREA MARKET VALUE
BAS	1,768	100	1,768	221,324
FGR	483	55	266	33,299
FOP	18	30	5	626
FUS	732	100	732	91,634
PTO	152	5	8	1,002
PTO	204	5	10	1,252
STR	116	10	12	1,502
UOP	476	20	95	11,893
TOTALS	3,949		2,896	362,531

MARKET ADJUSTMENTS

TYPE	MDL	EFF. AREA	TOT ADJ PTS	EFF. BASE RATE	REPL. COST NEW	AYB	EYB	ECON	FNCT		NORM	% COND
0900	01	2,896	119.1168	141.45	409,639	1997	1999	0	0	0	11.50	88.50

1 SNGL FAM – 100% - 1998 Heated Area: 2500 HX Base Yr 1998

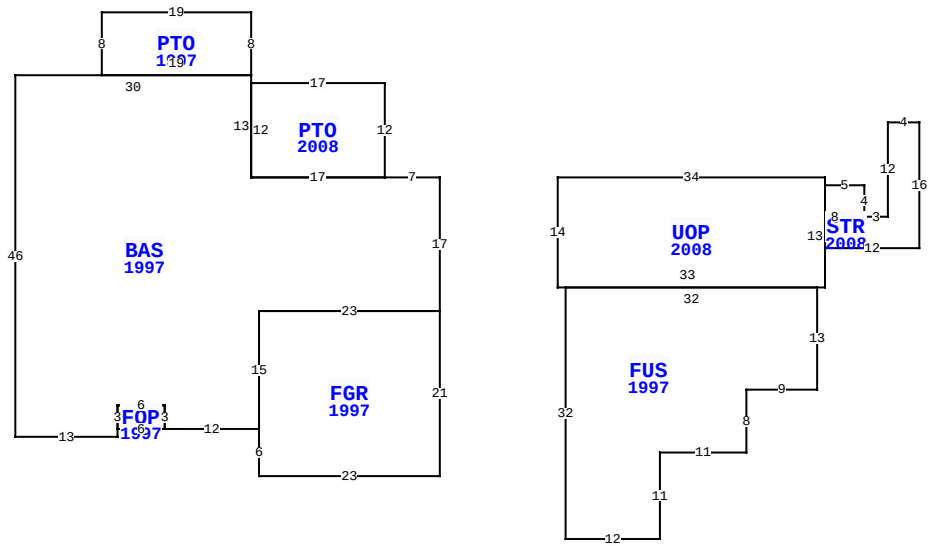

866 W LAGUNA DR, FERNANDINA BEACH

BLD DATE		LGL DATE	
XF DATE		LAND DATE	
INC DATE		AG DATE	

NASSAU COUNTY PROPERTY

PAGE 1 of 1 2

VALUATION SUMMARY

VALUATION BY		STANDARD
Tax Group: 2	Tax Dist:	
BUILDING MARKET VALUE		362,531
TOTAL MARKET OB/XF VALUE		6,708
TOTAL LAND VALUE - MARKET		302,500
TOTAL MARKET VALUE		671,739
SOH/AGL Deduction		418,045
ASSESSED VALUE		253,694
TOTAL EXEMPTION VALUE	HX HB	50,000
BASE TAXABLE VALUE		203,694
TOTAL JUST VALUE		671,739
NCON VALUE		0
INCOME VALUE		
PREVIOUS YEAR MKT VALUE		600,816

PERMIT NUM	DESCRIPTION	AMT	ISSUED
20090787	H/AC	4,000	06/19/2009
20060666	MOLD & WATER REPA	59,400	04/01/2006
20060554	WIRING ADDITION	3,000	03/17/2006
20060555	H/AC	3,000	03/17/2006
20060481	REROOM W/30YR SHN	4,500	03/07/2006
20060362	393 SF ADDITION	39,300	02/17/2006

SALES DATA

OFF RECORD Number	DATE	TYPE INST	Q U	V I	RSN CD	SALE PRICE
0790/0459	4/14/1997	WD	Q	I		162,500

GRANTOR: CENTEX REAL ESTATE CO

GRANTEE: WINKLER KENNETH H &

BUILDING NOTES

BUILDING DIMENSIONS

BAS=[YR=1997] W7 PTO=[YR=2008] N12 W17 S12 E17$ W17 N13 PTO=[YR=1997] N8 W19 S8 E19$ W30 S46 E13 N1 FOP=[YR=1997] E6 N3 W6 S3$ N3 E6 S3 E12 FGR=[YR=1997] S6 E23 N21 W23 S15 $ N15 E23 N17 $ PTR= E15 UOP=[YR=2008] E34 S1 STR=[YR=2008] E5 S4 E3 N12 E4 S16 W12 N8$ S13 W1 FUS=[YR=1997] S13 W9 S8 W11 S11 W12 N32 E32$ W33 N14$ W15$.

EXTRA FEATURES

LN	OB/XF CODE	DESCRIPTION	BLD	CAP	L	W	UNITS	UT	Adj R	ADJ UNIT PRICE	ORIG COND	YEAR ON	YEAR ACTUAL	Q	% COND	OB/XF MKT VALUE	NOTES
1	0504	FP-ELECTRI	0	100	0	0	1.00	UT	2,000.00	2,000.00	100	1997	1997	3	81	1,620	
2	0810	CONCRETE A	0	100	0	0	888.00	SF	6.50	6.50	100	1997	1997	3	75	4,329	
5	0810	CONCRETE A	0	100	0	0	114.00	SF	6.50	6.50	100	2000	2000	3	80	593	
6	0810	CONCRETE A	0	100	8	4	32.00	SF	6.50	6.50	100	2000	2000	3	80	166	

LAND DESCRIPTION

TOTAL OB/XF 6,708

LN	USE CODE	CLS	LAND USE DESCRIPTION	CAP	RD	LOC ZONE	FRONT	DEPTH	TOT LND UTS	UNIT TYPE	DT	DPTH FACT	% COND	TOT ADJ	UNIT PRICE	ADJ UNIT PRICE	LAND VALUE	OTHER ADJUSTMENTS AND NOTES	YEAR	DENSITY	DECL	FRZ	YR	CONSRV
1	000134	C	SFR POND	100	0003	R-1A	0.00	0.00	1.00	LT		1.00	1.00	1.10	275,000.00	302,500.00	302,500							

REVIEW DATE 10/28/2019 BY DJA Total Acres: 0.00 Total Land Value: 302,500 Market: 0 Agricultural: 0 Common: 302,500 PRINTED 08/02/2023 BY SYS