LOT 25
OCEAN RIDGE PB 5/103 & 104

WILSON CLAUDIA & DAVID
152 IBIS CT
FERNANDINA BEACH, FL 32034

2023

00-00-31-155R-0025-0000

BUILDING CHARACTERISTICS

ELEMENT	CD	CONSTRUCTION
Exterior Wall	05	AVERAGE 80
Exterior Wall	16	WD FR STUC 20
Roof Structur	03	GABLE/HIP 100
Roof Cover	03	COMP SHNGL 100
Interior Wall	05	DRYWALL 100
Interior Floo	13	LVT/LAMNT 80
Interior Floo	11	CLAY TILE 20
Air Condition	03	CENTRAL 100
Heating Type	04	AIR DUCTED 100
Bedrooms		3 100
Bathrooms		2.5 100
Frame	02	WOOD FRAME 100
Stories	2.	2. 100
Units		0 100
BUD8 Adjustme	02	DIST FB 100
Quality	03	Quality Level 03
DOR CODE	0100	SINGLE FAMILY
MAP NUM		MKT AREA 01
NEIGHBORHOOD/LOC	1075.00	

AREA TYPE	TOTAL GROSS AREA	PCT OF BASE	TOT ADJ AREA	SUBAREA MARKET VALUE
BAS	1,369	100	1,369	136,006
FEP	195	80	156	15,498
FGR	494	55	272	27,022
FOP	48	30	14	1,391
FOP	84	30	25	2,484
FUS	501	100	501	49,773
PTO	72	5	4	397
TOTALS	2,763		2,341	232,571

MARKET ADJUSTMENTS

TYPE	MDL	EFF. AREA	TOT ADJ PTS	EFF. BASE RATE	REPL. COST NEW	AYB	EYB	ECON	FNCT		NORM	% COND
0300	11	2,341	139.1463	118.27	276,870	1988	1988	0	0	0	16.00	84.00

1 SFR PATIO – 0% - 2023 Heated Area: 1870 HX Base Yr

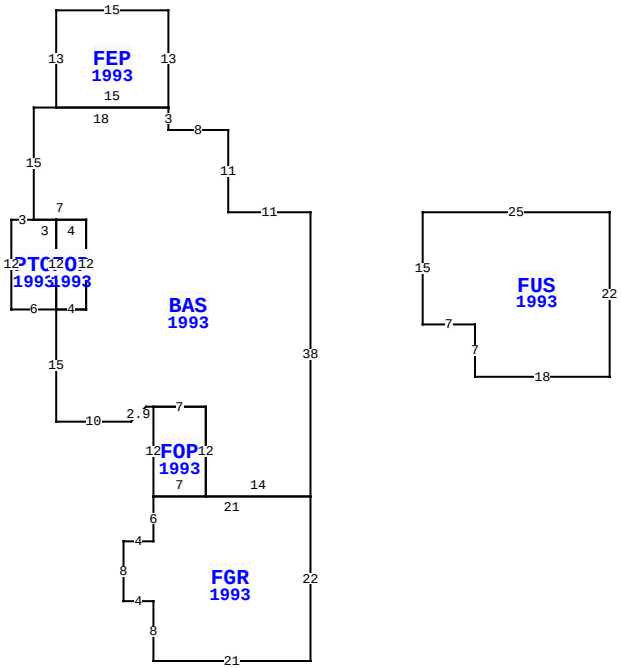

152 IBIS CT, FERNANDINA BEACH

BLD DATE		LGL DATE	
XF DATE		LAND DATE	
INC DATE		AG DATE	

NASSAU COUNTY PROPERTY

PAGE 1 of 1 2

VALUATION SUMMARY

VALUATION BY	STANDARD
Tax Group: 2	Tax Dist:
BUILDING MARKET VALUE	232,571
TOTAL MARKET OB/XF VALUE	5,407
TOTAL LAND VALUE - MARKET	250,000
TOTAL MARKET VALUE	487,978
SOH/AGL Deduction	0
ASSESSED VALUE	487,978
TOTAL EXEMPTION VALUE	0
BASE TAXABLE VALUE	487,978
TOTAL JUST VALUE	487,978
NCON VALUE	0
INCOME VALUE	
PREVIOUS YEAR MKT VALUE	452,324

PERMIT NUM	DESCRIPTION	AMT	ISSUED
B041662	REPAIR/RRF	2,000	09/16/2004
4606-B	N/A	54,750	12/16/1987

SALES DATA

OFF RECORD Number	DATE	TYPE INST	Q U /	V I /	RSN CD	SALE PRICE
2609/1283	12/12/2022	WD	Q	I	01	595,000
GRANTOR: SISSON MICHAEL R & LI						
GRANTEE: WILSON CLAUDIA & DA						
2298/1344	8/19/2019	WD	Q	I	01	369,000
GRANTOR: HARMON JAMES J & JOHN						
GRANTEE: SISSON MICHAEL R &						

BUILDING NOTES

BUILDING DIMENSIONS

BAS=[YR=1993] W11 N11 W8 N3 FEP=[YR=1993] N13 W15 S13 E15$ W18 S15 PTO=[YR=1993] W3 S12 E6 FOP=[YR=1993] E4 N12 W4 S12$ N12 W3$ E7 S12 W4 S15 E10 U2 R2 E1 FOP=[YR=1993] S12 FGR=[YR=1993] S6 W4 S8 E4 S8 E21N22 W21$ E7 N12 W7$ E7 S12E14 N38$ PTR=E15 FUS=[YR=1993] E25 S22 W18 N7 W7 N15$ W15$.

EXTRA FEATURES

LN	OB/XF CODE	DESCRIPTION	BLD	CAP	L	W	UNITS	UT	Adj R	ADJ UNIT PRICE	ORIG COND	YEAR ON	YEAR ACTUAL	Q	% COND	OB/XF MKT VALUE	NOTES
1	0810	CONCRETE A	0	0	42	3	126.00	SF	6.50	6.50	100	1988	1988	3	57	467	
2	0811	CONCRETE B	0	0	48	17	816.00	SF	5.20	5.20	100	1988	1988	3	57	2,419	
3	0500	FP-PRE FAB	0	0	0	0	1.00	UT	3,500.00	3,500.00	100	1988	1988	3	66	2,310	
4	1242	WD DECK A	0	0	12	8	96.00	SF	10.00	10.00	100	2003	2003	3	22	211	

LAND DESCRIPTION

TOTAL OB/XF 5,407

LN	USE CODE	CLS	LAND USE DESCRIPTION	CAP	RD	LOC ZONE	FRONT	DEPTH	TOT LND UTS	UNIT TYPE	DT	DPTH FACT	% COND	TOT ADJ	UNIT PRICE	ADJ UNIT PRICE	LAND VALUE	OTHER ADJUSTMENTS AND NOTES	YEAR	DENSITY	DECL	FRZ	YR	CONSRV
1	000100	C	SFR	0			0.00	0.00	1.00	LT		1.00	1.00	1.00	250,000.00	250,000.00	250,000							

REVIEW DATE 08/21/2019 BY DJA Total Acres: 0.00 Total Land Value: 250,000 Market: 0 Agricultural: 0 Common: 250,000 PRINTED 08/02/2023 BY SYS