LOT 24 IN OR 814/1227
OCEAN OAKS PB 6/50

CRUMRINE GEORGE B & SHARON S
2793 OCEAN OAKS DRIVE NORTH
FERNANDINA BEACH, FL 32034

2023

00-00-31-1550-0024-0000

BUILDING CHARACTERISTICS

ELEMENT	CD	CONSTRUCTION
Exterior Wall	16	WD FR STUC 80
Exterior Wall	17	CB STUCCO 20
Roof Structur	08	IRREGULAR 100
Roof Cover	03	COMP SHNGL 100
Interior Wall	05	DRYWALL 100
Interior Floo	14	CARPET 80
Interior Floo	15	HARDTILE 20
Air Condition	03	CENTRAL 100
Heating Type	04	AIR DUCTED 100
Bedrooms		4 100
Bathrooms		3 100
Frame	02	WOOD FRAME 100
Stories	1.	1. 100
Units		0 100
Occupancy	00	NONE 100
Quality	05	Quality Level 05
DOR CODE	0100	SINGLE FAMILY
MAP NUM		MKT AREA 01
NEIGHBORHOOD/LOC	1080.00	

AREA TYPE	TOTAL GROSS AREA	PCT OF BASE	TOT ADJ AREA	SUBAREA MARKET VALUE
BAS	2,640	100	2,640	379,913
FGR	432	55	238	34,250
FOP	76	30	23	3,310
FOP	200	30	60	8,635
STP	20	10	2	288
STP	48	10	5	720
UOP	884	20	177	25,472
TOTALS	4,300		3,145	452,586

MARKET ADJUSTMENTS

TYPE	MDL	EFF. AREA	TOT ADJ PTS	EFF. BASE RATE	REPL. COST NEW	AYB	EYB	ECON	FNCT		NORM	% COND
0500	01	3,145	114.7608	163.53	514,302	1998	1998	0	0	0	12.00	88.00

1 SFR CUST – 100% - 2005 Heated Area: 2640 HX Base Yr 2005

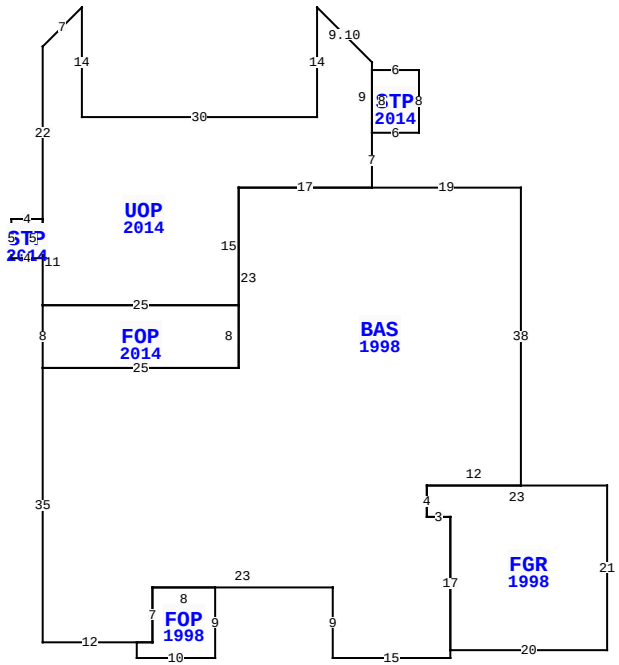

2793 N OCEAN OAKS DR, FERNANDINA BEACH

BLD DATE		LGL DATE	
XF DATE		LAND DATE	08/01/2023 MLU
INC DATE		AG DATE	

NASSAU COUNTY PROPERTY

PAGE 1 of 1 2

VALUATION SUMMARY

VALUATION BY		STANDARD
Tax Group: 2	Tax Dist:	
BUILDING MARKET VALUE		452,586
TOTAL MARKET OB/XF VALUE		54,366
TOTAL LAND VALUE - MARKET		225,000
TOTAL MARKET VALUE		731,952
SOH/AGL Deduction		327,148
ASSESSED VALUE		404,804
TOTAL EXEMPTION VALUE	HX HB	50,000
BASE TAXABLE VALUE		354,804
TOTAL JUST VALUE		731,952
NCON VALUE		0
INCOME VALUE		
PREVIOUS YEAR MKT VALUE		602,249

PERMIT NUM	DESCRIPTION	AMT	ISSUED
20140100	SWIM POOL	47,500	01/16/2014
20122044	RE-ROOF W/30YR SH	15,225	10/03/2012
20121896	REMODEL	1,503	09/06/2012
20070050	POOL SCREEN	0	12/28/2006
20062353	SWIM POOL	0	09/19/2006
972370	NEW CONSTR	133,000	12/08/1997

SALES DATA

OFF RECORD Number	DATE	TYPE INST	Q U	V I	RSN CD	SALE PRICE
0814/1227	11/24/1997	WD	Q	V		51,000
GRANTOR: BRYLEN HOMES LTD						
GRANTEE: CRUMRINE GEORGE B &						
0804/0639	8/25/1997	WD	U	V	19	37,300
GRANTOR: OCEAN OAKS LTD						
GRANTEE: BRYLEN HOMES LTD						

BUILDING NOTES

BUILDING DIMENSIONS

BAS=[YR=1998] W19 UOP=[YR=2014] N7 STP=[YR=2014] E6 N8 W6 S8$ N9 U7 L7 S14 W30 N14 L5 D5 S22 STP=[YR=2014] W4 S5 E4 N5$ S11 FOP=[YR=2014] S8 E25 N8 W25$ E25 N15 E17$ W17 S23 W25S35 E12 FOP=[YR=1998] S2 E10 N9 W8 S7 W2$ E2 N7 E23 S9 E15 N1 FGR=[YR=1998] E20 N21 W23 S4 E3 S17 $ N17 W3N4 E12 N38 $.

EXTRA FEATURES

LN	OB/XF CODE	DESCRIPTION	BLD	CAP	L	W	UNITS	UT	Adj R	ADJ UNIT PRICE	ORIG COND	YEAR ON	YEAR ACTUAL	Q	% COND	OB/XF MKT VALUE	NOTES
1	0500	FP-PRE FAB	0	100	0	0	1.00	UT	3,500.00	3,500.00	100	1998	1998	3	83	2,905	
2	0819	CONC 12"	0	100	3	10	30.00	SF	9.50	9.50	100	1998	1998	3	77	219	
3	0819	CONC 12"	0	100	2	5	10.00	SF	9.50	9.50	100	1998	1998	3	77	73	
4	0810	CONCRETE A	0	100	3	73	219.00	SF	6.50	6.50	100	1998	1998	3	77	1,096	
5	0810	CONCRETE A	0	100	0	0	870.00	SF	6.50	6.50	100	1998	1998	3	77	4,354	
6	0810	CONCRETE A	0	100	4	5	20.00	SF	6.50	6.50	100	1998	1998	3	77	100	
7	0861	POOL GUNIT	0	100	0	0	416.00	SF	85.00	85.00	100	2014	2014	3	78	27,581	
8	0911	SCRN RM A	0	100	0	0	1,321.00	SF	17.50	17.50	100	2014	2014	3	70	16,182	
9	0871	POOL HTR R	0	100	0	0	1.00	UT	2,000.00	2,000.00	100	2014	2014	3	70	1,400	
10	0855	CONC PAVER	0	100	0	0	48.00	SF	10.00	10.00	100	2014	2014	3	95	456	

LAND DESCRIPTION

TOTAL OB/XF 54,366

LN	USE CODE	CLS	LAND USE DESCRIPTION	CAP	RD	LOC ZONE	FRONT	DEPTH	TOT LND UTS	UNIT TYPE	DT	DPTH FACT	% COND	TOT ADJ	UNIT PRICE	ADJ UNIT PRICE	LAND VALUE	OTHER ADJUSTMENTS AND NOTES	YEAR	DENSITY	DECL	FRZ	YR	CONSRV
1	000100	C	SFR	100	0003	R-1	0.00	0.00	1.00	LT		1.00	1.00	1.00	225,000.00	225,000.00	225,000							

REVIEW DATE 07/12/2018 BY DJX Total Acres: 0.00 Total Land Value: 225,000 Market: 0 Agricultural: 0 Common: 225,000 PRINTED 08/02/2023 BY SYS