S 32FT OF LOT 7
IN OR 1495/1858
OCEAN HILLS PBK 5/372

ROBERTS PATTI L
2172-B 1ST AV
FERNANDINA BEACH, FL 32034

2023

00-00-31-155H-0007-0020

NASSAU COUNTY PROPERTY

BUILDING CHARACTERISTICS

ELEMENT	CD	CONSTRUCTION
Exterior Wall	05	AVERAGE 100
Roof Structur	03	GABLE/HIP 100
Roof Cover	03	COMP SHNGL 100
Interior Wall	05	DRYWALL 100
Interior Floo	14	CARPET 90
Interior Floo	11	CLAY TILE 10
Air Condition	03	CENTRAL 100
Heating Type	04	AIR DUCTED 100
Bedrooms		3 100
Bathrooms		2.5 100
Frame	02	WOOD FRAME 100
Stories	2.	2. 100
Units		0 100
Quality	04	Quality Level 04
DOR CODE	0100	SINGLE FAMILY
MAP NUM		MKT AREA 01
NEIGHBORHOOD/LOC	1043.00	

AREA TYPE	TOTAL GROSS AREA	PCT OF BASE	TOT ADJ AREA	SUBAREA MARKET VALUE
BAS	590	100	590	69,937
FGR	420	55	231	27,382
FOP	32	30	10	1,185
FSP	128	40	51	6,045
FUS	1,087	100	1,087	128,850
PTO	160	5	8	949
TOTALS	2,417		1,977	234,349

MARKET ADJUSTMENTS

TYPE	MDL	EFF. AREA	TOT ADJ PTS	EFF. BASE RATE	REPL. COST NEW	AYB	EYB	ECON	FNCT		NORM	% COND
0320	11	1,977	141.3905	134.32	265,551	1998	1998	0	0	0	11.75	88.25

1 TOWNHOUSE - 100% - 2008 Heated Area: 1677 HX Base Yr 2008

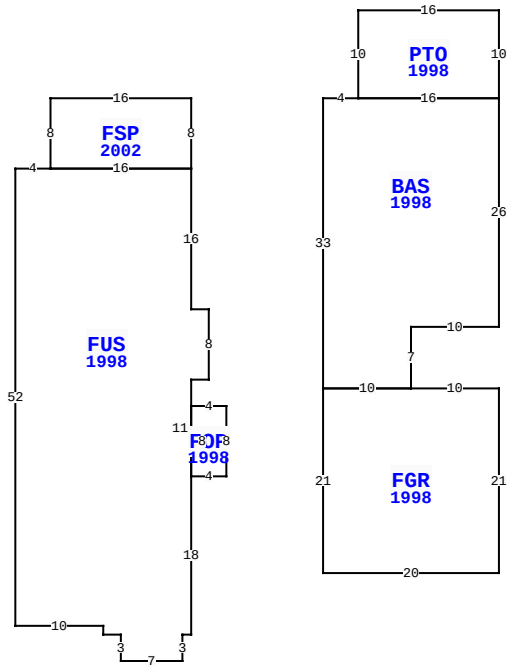

2172 1ST AV, FERNANDINA BEACH

BLD DATE		LGL DATE	
XF DATE		LAND DATE	
INC DATE		AG DATE	

NASSAU COUNTY PROPERTY — VALUATION SUMMARY

VALUATION BY		STANDARD
Tax Group: 2	Tax Dist:	
BUILDING MARKET VALUE		234,349
TOTAL MARKET OB/XF VALUE		7,975
TOTAL LAND VALUE - MARKET		192,000
TOTAL MARKET VALUE		434,324
SOH/AGL Deduction		260,597
ASSESSED VALUE		173,727
TOTAL EXEMPTION VALUE	HX HB	50,000
BASE TAXABLE VALUE		123,727
TOTAL JUST VALUE		434,324
NCON VALUE		0
INCOME VALUE		
PREVIOUS YEAR MKT VALUE		460,518

PERMIT NUM	DESCRIPTION	AMT	ISSUED
20141746	WINDOWS	4,300	08/07/2014
B0021148	REMODEL	1,000	07/03/2002
B0021149	REMODEL	1,000	07/03/2002

SALES DATA

OFF RECORD Number	DATE	TYPE INST	Q / U	V / I	RSN CD	SALE PRICE
1938/0608	9/16/2014	QC	U	I	11	79,500
GRANTOR: STRICKLAND ANN R						
GRANTEE: ROBAS VICTORIA B						
1938/0605	9/16/2014	QC	U	I	11	79,500
GRANTOR: ANDERSON JANE A						
GRANTEE: ROBAS VICTORIA B						

BUILDING NOTES

BUILDING DIMENSIONS

FSP=[YR=2002] W16 S8 FUS=[YR=1998] W4 S52 E10 S1 E2 S3 E7 N3 E1 N18 FOP=[YR=1998] E4 N8 W4 S8 $ N11 E2 N8 W2 N16 W16 $ E16 N8 $ PTR= E15 BAS=[YR=1998] E4 PTO=[YR=1998] N10 E16 S10 W16 $ E16 S26 W10 S7 FGR=[YR=1998] E10 S21 W20 N21 E10 $ W10 N33 $ W15 $.

EXTRA FEATURES

LN	OB/XF CODE	DESCRIPTION	BLD	CAP	L	W	UNITS	UT	Adj R	ADJ UNIT PRICE	ORIG COND	YEAR ON	YEAR ACTUAL	Q	% COND	OB/XF MKT VALUE	NOTES
1	0500	FP-PRE FAB	0	100	0	0	1.00	UT	3,500.00	3,500.00	100	1998	1998	3	83	2,905	
2	0810	CONCRETE A	0	100	0	0	921.00	SF	6.50	6.50	100	1998	1998	3	77	4,610	
3	0810	CONCRETE A	0	100	0	0	76.00	SF	6.50	6.50	100	1998	1998	3	77	380	
4	0810	CONCRETE A	0	100	4	4	16.00	SF	6.50	6.50	100	1998	1998	3	77	80	

LAND DESCRIPTION

TOTAL OB/XF 7,975

LN	USE CODE	CLS	LAND USE DESCRIPTION	CAP	RD	LOC ZONE	FRONT	DEPTH	TOT LND UTS	UNIT TYPE	DT	DPTH FACT	% COND	TOT ADJ	UNIT PRICE	ADJ UNIT PRICE	LAND VALUE	OTHER ADJUSTMENTS AND NOTES	YEAR	DENSITY	DECL	FRZ	YR	CONSRV
1	000100	C	SFR	100			32.00	130.00	32.00	FF		1.00	1.00	1.50	4,000.00	6,000.00	192,000							

REVIEW DATE 12/28/2022 BY TWA Total Acres: 0.00 Total Land Value: 192,000 Market: 0 Agricultural: 0 Common: 192,000 PRINTED 08/02/2023 BY SYS