N 28FT OF LOT 4
IN OR 1576/34
OCEAN HILLS PBK 5/372

RILEY ROBERT D & MARSHA N JOINT REVOC TRUST/RILEY
1921 WINDSWEPT OAK LANE
FERNANDINA BEACH, FL 32034

2023

00-00-31-155H-0004-0010

NASSAU COUNTY PROPERTY

BUILDING CHARACTERISTICS

ELEMENT	CD	CONSTRUCTION
Exterior Wall	05	AVERAGE 100
Roof Structur	03	GABLE/HIP 100
Roof Cover	03	COMP SHNGL 100
Interior Wall	05	DRYWALL 100
Interior Floo	14	CARPET 90
Interior Floo	11	CLAY TILE 10
Air Condition	03	CENTRAL 100
Heating Type	04	AIR DUCTED 100
Bedrooms		3 100
Bathrooms		2 100
Frame	02	WOOD FRAME 100
Stories	2.	2. 100
Units		0 100
Quality	03	Quality Level 03
DOR CODE	0100	SINGLE FAMILY
MAP NUM		MKT AREA 01
NEIGHBORHOOD/LOC	1043.00	

AREA TYPE	TOTAL GROSS AREA	PCT OF BASE	TOT ADJ AREA	SUBAREA MARKET VALUE
BAL	144	15	22	2,508
BAS	580	100	580	66,121
FGR	299	55	164	18,696
FOP	28	30	8	912
FUS	950	100	950	108,301
PTO	49	5	2	228
PTO	120	5	6	684
TOTALS	2,170		1,732	197,449

MARKET ADJUSTMENTS

TYPE	MDL	EFF. AREA	TOT ADJ PTS	EFF. BASE RATE	REPL. COST NEW	AYB	EYB	ECON	FNCT		NORM	% COND
0320	11	1,732	137.5410	130.66	226,303	1996	1996	0	0	0	12.75	87.25

1 TOWNHOUSE - 0% - 0 Heated Area: 1530 HX Base Yr

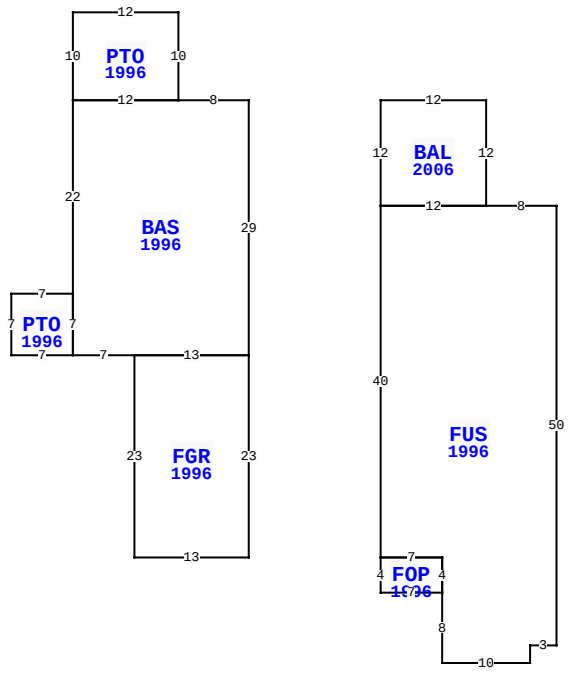

2206 1ST AVE, FERNANDINA BEACH

BLD DATE		LGL DATE	
XF DATE		LAND DATE	
INC DATE		AG DATE	

VALUATION SUMMARY

VALUATION BY	STANDARD
Tax Group: 2	Tax Dist:
BUILDING MARKET VALUE	197,449
TOTAL MARKET OB/XF VALUE	2,904
TOTAL LAND VALUE - MARKET	168,000
TOTAL MARKET VALUE	368,353
SOH/AGL Deduction	80,722
ASSESSED VALUE	287,631
TOTAL EXEMPTION VALUE	0
BASE TAXABLE VALUE	287,631
TOTAL JUST VALUE	368,353
NCON VALUE	0
INCOME VALUE	
PREVIOUS YEAR MKT VALUE	391,682

PERMIT NUM	DESCRIPTION	AMT	ISSUED
20060931	XFOB	2,000	04/28/2006
B969807	NEW CONSTR	83,646	05/09/1996

SALES DATA

OFF RECORD Number	DATE	TYPE INST	Q U	V I	RSN CD	SALE PRICE
1938/0608	9/16/2014	QC	U	I	11	79,500
GRANTOR: STRICKLAND ANN R						
GRANTEE: ROBAS VICTORIA B						
1938/0605	9/16/2014	QC	U	I	11	79,500
GRANTOR: ANDERSON JANE A						
GRANTEE: ROBAS VICTORIA B						

BUILDING NOTES

BUILDING DIMENSIONS

BAS=[YR=1996] W8 PTO=[YR=1996] N10 W12 S10 E12$ W12 S22 PTO=[YR=1996] W7 S7 E7 N7$ S7 E7 FGR=[YR=1996] S23 E13 N23 W13$ E13 N29$ PTR=E15 BAL=[YR=2006] E12 S12 FUS=[YR=1996] E8 S50 W3S2 W10 N8 FOP=[YR=1996] W7 N4 E7 S4$ N4 W7 N40 E12$W12 N12$ W15$.

EXTRA FEATURES

LN	OB/XF CODE	DESCRIPTION	BLD	CAP	L	W	UNITS	UT	Adj R	ADJ UNIT PRICE	ORIG COND	YEAR ON	YEAR ACTUAL	Q	% COND	OB/XF MKT VALUE	NOTES
1	0810	CONCRETE A	0	0	0	0	469.00	SF	6.50	6.50	100	1996	1996	3	73	2,225	
2	0810	CONCRETE A	0	0	0	0	143.00	SF	6.50	6.50	100	1996	1996	3	73	679	

LAND DESCRIPTION

TOTAL OB/XF 2,904

LN	USE CODE	CLS	LAND USE DESCRIPTION	CAP	RD	LOC ZONE	FRONT	DEPTH	TOT LND UTS	UNIT TYPE	DT	DPTH FACT	% COND	TOT ADJ	UNIT PRICE	ADJ UNIT PRICE	LAND VALUE	OTHER ADJUSTMENTS AND NOTES	YEAR	DENSITY	DECL	FRZ	YR	CONSRV
1	000100	C	SFR	0			28.00	130.00	28.00	FF		1.00	1.00	1.50	4,000.00	6,000.00	168,000							

REVIEW DATE 03/21/2017 BY DJX Total Acres: 0.00 Total Land Value: 168,000 Market: 0 Agricultural: 0 Common: 168,000 PRINTED 08/02/2023 BY SYS