BLOCK 16 LOT 3
OCEAN CITY SOUTH PORTION R/P
PBK 2/39

DEVAUL JOHN W & DIANA K
999 S FLETCHER AV
FERNANDINA BEACH, FL 32034

2023

00-00-31-1540-0016-0030

BUILDING CHARACTERISTICS

ELEMENT	CD	CONSTRUCTION
Exterior Wall	16	WD FR STUC 100
Roof Structur	03	GABLE/HIP 100
Roof Cover	08	CLAY TILE 100
Interior Wall	05	DRYWALL 100
Interior Floo	12	HARDWOOD 60
Interior Floo	15	HARDTILE 40
Air Condition	03	CENTRAL 100
Heating Type	04	AIR DUCTED 100
Bedrooms		3 100
Bathrooms		4 100
Frame	02	WOOD FRAME 100
Stories	2.	2. 100
Units		0 100
BUD8 Adjustme	02	DIST FB 100
Quality	03	Quality Level 03
DOR CODE	0100	SINGLE FAMILY
MAP NUM		MKT AREA 01
NEIGHBORHOOD/LOC	1057.00	

AREA TYPE	TOTAL GROSS AREA	PCT OF BASE	TOT ADJ AREA	SUBAREA MARKET VALUE
BAL	136	15	20	5,259
BAL	238	15	36	9,467
BAS	922	100	922	242,466
FGR	791	55	435	114,395
FOP	40	30	12	3,156
FUS	1,625	100	1,625	427,340
STR	44	10	4	1,052
UOP	217	20	43	11,308
UOP	256	20	51	13,412
UOP	304	20	61	16,042
TOTALS	4,573		3,209	843,896

MARKET ADJUSTMENTS

TYPE	MDL	EFF. AREA	TOT ADJ PTS	EFF. BASE RATE	REPL. COST NEW	AYB	EYB	ECON	FNCT		NORM	% COND
0500	12	3,209	197.3768	281.26	902,563	2009	2009	0	0	0	6.50	93.50

1 SFR CUST – 100% - 2021 Heated Area: 2547 HX Base Yr 2021

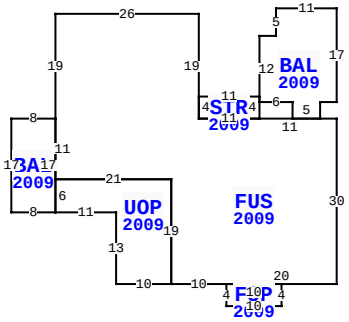

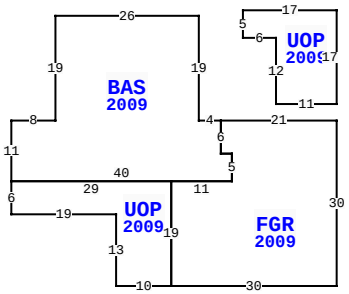

999 S FLETCHER AVE, FERNANDINA BEACH

BLD DATE		LGL DATE	
XF DATE		LAND DATE	
INC DATE		AG DATE	

NASSAU COUNTY PROPERTY

PAGE 1 of 1 2

VALUATION SUMMARY

VALUATION BY		STANDARD
Tax Group: 2	Tax Dist:	
BUILDING MARKET VALUE		843,896
TOTAL MARKET OB/XF VALUE		34,356
TOTAL LAND VALUE - MARKET		382,500
TOTAL MARKET VALUE		1,260,752
SOH/AGL Deduction		265,589
ASSESSED VALUE		995,163
TOTAL EXEMPTION VALUE	HX HB	50,000
BASE TAXABLE VALUE		945,163
TOTAL JUST VALUE		1,260,752
NCON VALUE		0
INCOME VALUE		
PREVIOUS YEAR MKT VALUE		1,166,884

PERMIT NUM	DESCRIPTION	AMT	ISSUED
20090086	ELEC OTHER	8,500	01/21/2009
20090083	H/AC	8,500	01/20/2009
20090064	GAS	895	01/16/2009
20081696	ELEC OTHER	600	11/17/2008
20081695	SWIM POOL	21,000	11/17/2008
20081697	OTHER	1,000	11/17/2008

SALES DATA

OFF RECORD Number	DATE	TYPE INST	Q / U	V / I	RSN CD	SALE PRICE
2403/0411	10/23/2020	WD	Q	I	01	1,215,000
GRANTOR: THOMAS LEE H & PAMELA						
GRANTEE: DEVAUL JOHN W & DIA						
1551/0140	2/14/2008	DG	U	I	01	100
GRANTOR: THOMAS LEE H						
GRANTEE: THOMAS LEE H & PAME						

BUILDING NOTES

BUILDING DIMENSIONS

FGR=[YR=2009] W21 BAS=[YR=2009] W4N19W26 S19W8S11
UOP=[YR=2009] S6E19S13E10 N19W29$ E40N5W2N6$S6E2S5W11S19
E30N30$ PTR=N38 FUS=[YR=2009] N30W3 BAL=[YR=2009] N3
E3N17W11S5W3S12E6 S3 E5$ W11 STR=[YR=2009] N4W11S4E11$
W11N19W26S19 BAL=[YR=2009] W8S17E8 UOP=[YR=2009]
E11S13E10N19W21S6$N17$ S11 E21S19E10 FOP=[YR=2009] S4E10N4
W10$ E20$ S38$ PTR=N3 UOP=[YR=2009] N17W17S5E6S12E11$ S3$.

EXTRA FEATURES

LN	OB/XF CODE	DESCRIPTION	BLD	CAP	L	W	UNITS	UT	Adj R	ADJ UNIT PRICE	ORIG COND	YEAR ON	YEAR ACTUAL	Q	% COND	OB/XF MKT VALUE	NOTES
1	0500	FP-PRE FAB	0	100	0	0	1.00	UT	3,500.00	3,500.00	100	2009	2009	3	94	3,290	
3	0861	POOL GUNIT	0	100	18	12	216.00	SF	85.00	85.00	100	2009	2009	3	60	11,016	
5	0855	CONC PAVER	0	100	0	0	2,000.00	SF	7.00	7.00	100	2009	2009	3	91	12,740	
6	1125	CB/STC 6"	0	100	95	4	340.00	SF	7.35	7.35	100	2009	2009	3	91	2,274	
8	1125	CB/STC 6"	0	100	26	5	130.00	SF	7.35	7.35	100	2009	2009	3	91	870	
9	1125	CB/STC 6"	0	100	73	7	511.00	SF	7.35	7.35	100	2009	2009	3	91	3,418	
10	0810	CONCRETE A	0	100	5	25	125.00	SF	6.50	6.50	100	2010	2010	3	92	748	

LAND DESCRIPTION

TOTAL OB/XF 34,356

LN	USE CODE	CLS	LAND USE DESCRIPTION	CAP	RD	LOC ZONE	FRONT	DEPTH	TOT LND UTS	UNIT TYPE	DT	DPTH FACT	% COND	TOT ADJ	UNIT PRICE	ADJ UNIT PRICE	LAND VALUE	OTHER ADJUSTMENTS AND NOTES	YEAR	DENSITY	DECL	FRZ	YR	CONSRV
1	000100	C	SFR	100	0006	R-1	75.00	72.00	75.00	FF		1.00	1.00	0.85	6,000.00	5,100.00	382,500							

REVIEW DATE 10/30/2018 BY DJX Total Acres: 0.00 Total Land Value: 382,500 Market: 0 Agricultural: 0 Common: 382,500 PRINTED 08/02/2023 BY SYS