LOT 1
OCEAN CAY PB 6/166

SJOSTROM CALLIE J & TOMAS G
2601 PORTSIDE DRIVE
FERNANDINA BEACH, FL 32034

2023

00-00-31-152C-0001-0000

BUILDING CHARACTERISTICS

ELEMENT	CD	CONSTRUCTION
Exterior Wall	16	WD FR STUC 100
Roof Structur	08	IRREGULAR 100
Roof Cover	03	COMP SHNGL 100
Interior Wall	05	DRYWALL 100
Interior Floo	12	HARDWOOD 90
Interior Floo	11	CLAY TILE 10
Air Condition	03	CENTRAL 100
Heating Type	04	AIR DUCTED 100
Bedrooms		3 100
Bathrooms		3.5 100
Frame	02	WOOD FRAME 100
Stories	2.	2. 100
Units		0 100
Quality	05	Quality Level 05
DOR CODE	0100	SINGLE FAMILY
MAP NUM		MKT AREA 01
NEIGHBORHOOD/LOC	1081.00	

AREA TYPE	TOTAL GROSS AREA	PCT OF BASE	TOT ADJ AREA	SUBAREA MARKET VALUE
BAS	1,621	100	1,621	291,108
FGR	510	55	280	50,284
FOP	66	30	20	3,592
FOP	242	30	73	13,110
FSP	226	40	90	16,163
FUS	720	100	720	129,302
STR	22	10	2	359
TOTALS	3,407		2,806	503,916

MARKET ADJUSTMENTS

TYPE	MDL	EFF. AREA	TOT ADJ PTS	EFF. BASE RATE	REPL. COST NEW	AYB	EYB	ECON	FNCT		NORM	% COND
0900	11	2,806	155.1053	184.19	516,837	2017	2017	0	0	0	2.50	97.50

1 SNGL FAM – 100% - 2021 Heated Area: 2341 HX Base Yr 2021

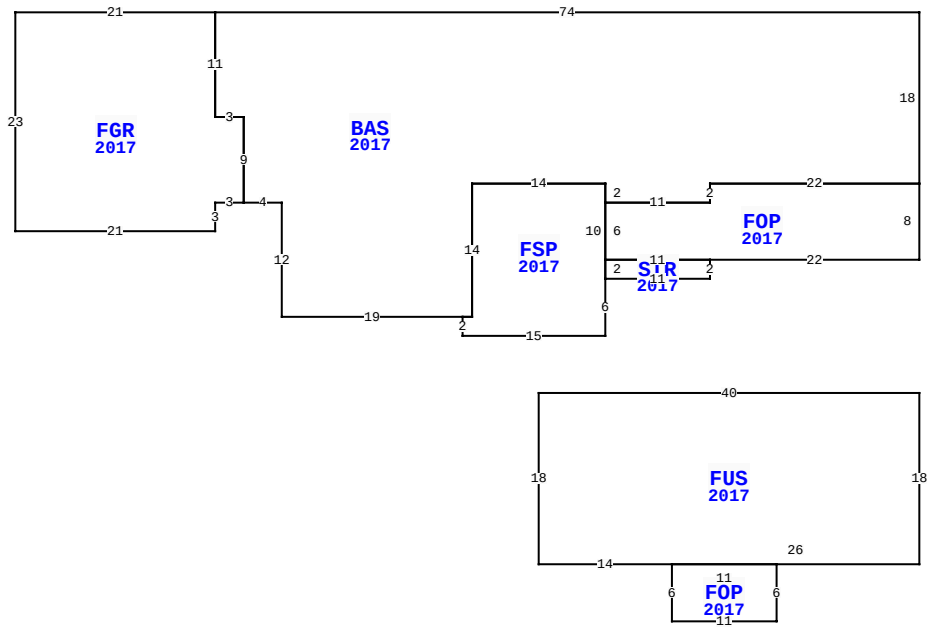

2601 PORTSIDE DR, FERNANDINA BEACH

BLD DATE		LGL DATE	
XF DATE		LAND DATE	
INC DATE		AG DATE	

NASSAU COUNTY PROPERTY

PAGE 1 of 1 2

VALUATION SUMMARY

VALUATION BY		STANDARD
Tax Group: 2	Tax Dist:	
BUILDING MARKET VALUE		503,916
TOTAL MARKET OB/XF VALUE		7,055
TOTAL LAND VALUE - MARKET		194,250
TOTAL MARKET VALUE		705,221
SOH/AGL Deduction		108,591
ASSESSED VALUE		596,630
TOTAL EXEMPTION VALUE	HX HB	50,000
BASE TAXABLE VALUE		546,630
TOTAL JUST VALUE		705,221
NCON VALUE		0
INCOME VALUE		
PREVIOUS YEAR MKT VALUE		715,701

PERMIT NUM	DESCRIPTION	AMT	ISSUED
20161266	CO ISSUED	0	02/07/2017
20161266	NEW CONSTR	301,224	05/03/2016

SALES DATA

OFF RECORD Number	DATE	TYPE INST	Q / U	V / I	RSN CD	SALE PRICE
2340/0025	2/14/2020	WD	Q	I	02	689,000
GRANTOR: TOSONI MELINDA M REVO						
GRANTEE: SJOSTROM CALLIE J &						
2244/1933	12/18/2018	WD	U	I	11	100
GRANTOR: TOSONI MELINDA M						
GRANTEE: MELINDA TOSONI REVO						

BUILDING NOTES

BUILDING DIMENSIONS

BAS=[YR=2017] W74 FGR=[YR=2017] W21 S23 E21 N3 E3 N9 W3 N11$ S11 E3 S9 E4 S12 E19 FSP=[YR=2017] S2 E15 N6 STR=[YR=2017] E11 N2 FOP=[YR=2017] E22 N8 W22 S2 W11 S6 E11$ W11 S2$ N10 W14 S14 W1$ E1 N14 E14 S2 E11 N2 E22 N18$ PTR=S40 FUS=[YR=2017] W40 S18 E14 FOP=[YR=2017] S6 E11 N6 W11$ E26 N18$ N40$.

EXTRA FEATURES

LN	OB/XF CODE	DESCRIPTION	BLD	CAP	L	W	UNITS	UT	Adj R	ADJ UNIT PRICE	ORIG COND	YEAR ON	YEAR ACTUAL	Q	% COND	OB/XF MKT VALUE	NOTES
1	0855	CONC PAVER	0	100	0	0	874.00	SF	7.00	7.00	100	2017	2017	3	97	5,934	
2	0855	CONC PAVER	0	100	0	0	87.00	SF	7.00	7.00	100	2017	2017	3	97	591	
3	0855	CONC PAVER	0	100	0	0	78.00	SF	7.00	7.00	100	2017	2017	3	97	530	

LAND DESCRIPTION

TOTAL OB/XF 7,055

LN	USE CODE	CLS	LAND USE DESCRIPTION	CAP	RD	LOC ZONE	FRONT	DEPTH	TOT LND UTS	UNIT TYPE	DT	DPTH FACT	% COND	TOT ADJ	UNIT PRICE	ADJ UNIT PRICE	LAND VALUE	OTHER ADJUSTMENTS AND NOTES	YEAR	DENSITY	DECL	FRZ	YR	CONSRV
1	000100	C	SFR	100	0003	PUD	0.00	0.00	1.00	LT		1.00	1.00	1.05	185,000.00	194,250.00	194,250							

REVIEW DATE 03/14/2017 BY DJ Total Acres: 0.00 Total Land Value: 194,250 Market: 0 Agricultural: 0 Common: 194,250 PRINTED 08/02/2023 BY SYS