BLK 3 LOT 6
OCEAN CITY NORTH PORTION R/P
PBK 2/38

KILLICK RAYNALD
1050 CREEK RIDGE POINTE
ALPHARETTA, GA 30005

2023

00-00-31-1520-0003-0060

BUILDING CHARACTERISTICS

ELEMENT	CD	CONSTRUCTION
Exterior Wall	07	ASB SHNGLE 70
Exterior Wall	23	REINF CONC 30
Roof Structur	03	GABLE/HIP 100
Roof Cover	03	COMP SHNGL 100
Interior Wall	02	WALL BD/WD 100
Interior Floo	12	HARDWOOD 100
Air Condition	03	CENTRAL 100
Heating Type	04	AIR DUCTED 100
Bedrooms		7 100
Bathrooms		4 100
Frame	02	WOOD FRAME 100
Stories	3.	3. 100
Units		0 100
BUD8 Adjustme	02	DIST FB 100
Occupancy	00	NONE 100
Quality	03	Quality Level 03
DOR CODE	0800	MULTI-FAMILY
MAP NUM		MKT AREA 01
NEIGHBORHOOD/LOC	1057.00	

AREA TYPE	TOTAL GROSS AREA	PCT OF BASE	TOT ADJ AREA	SUBAREA MARKET VALUE
APT	802	100	802	60,726
APT	826	100	826	62,543
BAL	16	15	2	151
BAL	25	15	4	303
BAL	54	15	8	606
BAL	72	15	11	833
FUS	1,604	100	1,604	121,452
SFB	130	80	104	7,875
STR	36	10	4	303
STR	36	10	4	303
TOTALS	5,517		4,097	310,218

MARKET ADJUSTMENTS

TYPE	MDL	EFF. AREA	TOT ADJ PTS	EFF. BASE RATE	REPL. COST NEW	AYB	EYB	ECON	FNCT		NORM	% COND
2800	01	4,097	83.2480	96.15	393,927	1930	1990	0	0	0	21.25	78.75

1 TRI PLEX - 0% - 0 Heated Area: 3336 HX Base Yr

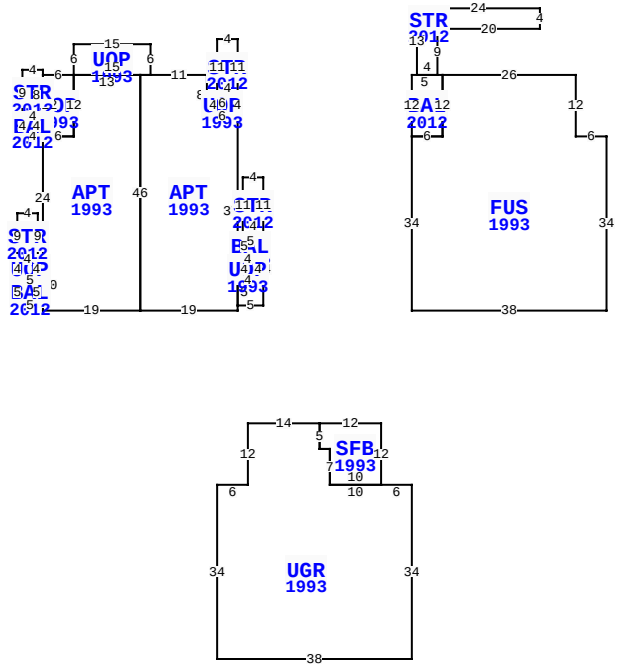

** This building has 19 Sub-Areas

487 S FLETCHER AVE, FERNANDINA BEACH

BLD DATE		LGL DATE	
XF DATE		LAND DATE	
INC DATE		AG DATE	

NASSAU COUNTY PROPERTY

PAGE 1 of 1 2

VALUATION SUMMARY

VALUATION BY	STANDARD
Tax Group: 2	Tax Dist:
BUILDING MARKET VALUE	310,218
TOTAL MARKET OB/XF VALUE	2,469
TOTAL LAND VALUE - MARKET	390,150
TOTAL MARKET VALUE	702,837
SOH/AGL Deduction	4,266
ASSESSED VALUE	698,571
TOTAL EXEMPTION VALUE	0
BASE TAXABLE VALUE	698,571
TOTAL JUST VALUE	702,837
NCON VALUE	0
INCOME VALUE	
PREVIOUS YEAR MKT VALUE	635,065

PERMIT NUM	DESCRIPTION	AMT	ISSUED
20220260	REMODEL	200,000	08/17/2022
20220271	WINDOWS & DOORS	22,400	08/17/2022
20101156	H/AC	1,000	07/15/2010
20100034	WATER HEATER REPL	700	01/08/2010
20052482	CHNGE SRVC	2,000	08/18/2005
20052483	H/AC	3,000	08/18/2005

SALES DATA

OFF RECORD Number	DATE	TYPE INST	Q U	V I	RSN CD	SALE PRICE
2498/0701	9/17/2021	WD	Q	I	01	900,000
GRANTOR: FERNANDINA BEACH RENT						
GRANTEE: KILLICK RAYNALD						
2249/0676	1/15/2019	SW	U	I	11	100
GRANTOR: LASSERRE CHARLES W &						
GRANTEE: FERNANDINA BEACH RE						

BUILDING NOTES

BUILDING DIMENSIONS

APT=[YR=1993] W11 UOP=[YR=1993] N6 W15 S6 UOP=[YR=1993] W6STR=[YR=2012] N1W4S9 BAL=[YR=2012] S4E4N4W4$ E4N8$ S12E6 N12$ E15$ W2 APT=[YR=1993] W13 S12 W6 S24 UOP=[YR=1993] W1 STR=[YR=2012] N9W4 S9E4$ W4S4 BAL=[YR=2012] S5E5N5W5$ E5N4$ S10E19 N46 $ S46 E19 N1 BAL=[YR=2012] E5N14 STR=[YR=2012] N11W4S11 E4$ W5S5 UOP=[YR=1993] S4E4N4W4$ E4 S4W4S5$ N37UOP=[YR=1993] N4 STR=[YR=2012] N11W4S11E4$ W6S4E6$ W6N8$ PTR= E40 BAL=[YR=2012] S12 FUS=[YR=1993] S34E38 N34W6N12W26S12W6$ E6N12W1 STR=[YR=2012] N9E20N4W24S13E4$ W5$ W40$ PTR=S80E40 UGR=[YR=1993] W6 SFB=[YR=1993] N12W12S5E2S7E10$ W10N7 W2N5W14 S12W6S34E38N34$W40N80$.

EXTRA FEATURES

LN	OB/XF CODE	DESCRIPTION	BLD	CAP	L	W	UNITS	UT	Adj R	ADJ UNIT PRICE	ORIG COND	YEAR ON	YEAR ACTUAL	Q	% COND	OB/XF MKT VALUE	NOTES
1	0855	CONC PAVER	0	0	0	0	425.00	SF	7.00	7.00	100	2002	2002	3	83	2,469	

LAND DESCRIPTION

TOTAL OB/XF 2,469

LN	USE CODE	CLS	LAND USE DESCRIPTION	CAP	RD	LOC ZONE	FRONT	DEPTH	TOT LND UTS	UNIT TYPE	DT	DPTH FACT	% COND	TOT ADJ	UNIT PRICE	ADJ UNIT PRICE	LAND VALUE	OTHER ADJUSTMENTS AND NOTES	YEAR	DENSITY	DECL	FRZ	YR	CONSRV
1	000800	C	MULTI-FAM	0	0006	R-3	75.00	133.00	75.00	FF		1.00	1.00	0.87	6,000.00	5,202.00	390,150							

REVIEW DATE 07/25/2023 BY HS Total Acres: 0.00 Total Land Value: 390,150 Market: 0 Agricultural: 0 Common: 390,150 PRINTED 08/02/2023 BY SYS