LOT 7
IN OR 1977/1571
OAK MARSH ESTATES PB 4/105

MURPHY TODD L
2054 OAK MARSH DR
FERNANDINA BEACH, FL 32034

2023

00-00-31-1510-0007-0000

NASSAU COUNTY PROPERTY

BUILDING CHARACTERISTICS

ELEMENT	CD	CONSTRUCTION
Exterior Wall	10	ABOVE AVG 100
Roof Structur	03	GABLE/HIP 100
Roof Cover	03	COMP SHNGL 100
Interior Wall	05	DRYWALL 100
Interior Floo	12	HARDWOOD 70
Interior Floo	15	HARDTILE 30
Air Condition	03	CENTRAL 100
Heating Type	04	AIR DUCTED 100
Bedrooms		3 100
Bathrooms		2.5 100
Frame	02	WOOD FRAME 100
Stories	1.	1. 100
Units		0 100
BUD8 Adjustme	02	DIST FB 100
Occupancy	00	NONE 100
Quality	04	Quality Level 04
DOR CODE	0100	SINGLE FAMILY
MAP NUM		MKT AREA 01
NEIGHBORHOOD/LOC	1007.00	

AREA TYPE	TOTAL GROSS AREA	PCT OF BASE	TOT ADJ AREA	SUBAREA MARKET VALUE
BAS	2,872	100	2,872	327,897
DCK	552	10	55	6,280
FGR	648	55	356	40,645
FOP	12	30	4	457
FOP	69	30	21	2,398
FOP	120	30	36	4,110
FSP	114	40	46	5,252
TOTALS	4,387		3,390	387,037

MARKET ADJUSTMENTS

TYPE	MDL	EFF. AREA	TOT ADJ PTS	EFF. BASE RATE	REPL. COST NEW	AYB	EYB	ECON	FNCT		NORM	% COND
0900	01	3,390	110.5104	131.23	444,870	1983	1995	0	0	0	13.00	87.00

1 SNGL FAM – 100% - 2016 Heated Area: 2872 HX Base Yr 2016

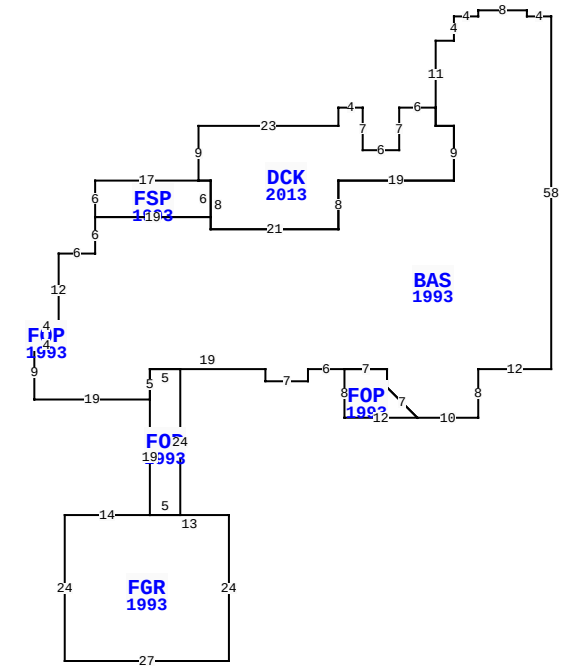

2054 OAK MARSH DR, FERNANDINA BEACH

BLD DATE		LGL DATE	
XF DATE		LAND DATE	
INC DATE		AG DATE	

VALUATION SUMMARY

VALUATION BY		STANDARD
Tax Group: 2	Tax Dist:	
BUILDING MARKET VALUE		387,037
TOTAL MARKET OB/XF VALUE		18,702
TOTAL LAND VALUE - MARKET		517,500
TOTAL MARKET VALUE		923,239
SOH/AGL Deduction		410,476
ASSESSED VALUE		512,763
TOTAL EXEMPTION VALUE	HX HB	50,000
BASE TAXABLE VALUE		462,763
TOTAL JUST VALUE		923,239
NCON VALUE		0
INCOME VALUE		
PREVIOUS YEAR MKT VALUE		881,699

PERMIT NUM	DESCRIPTION	AMT	ISSUED
20040963	REPAIR/RRF	3,000	05/25/2004

SALES DATA

OFF RECORD Number	DATE	TYPE INST	Q U	V I	RSN CD	SALE PRICE
1977/1571	4/21/2015	WD	U	I	11	100
GRANTOR: JOYNER DONALD J & MAR						
GRANTEE: MURPHY TODD L						
1975/1515	4/21/2015	WD	Q	I	05	670,000
GRANTOR: JOYNER DONALD J & MAR						
GRANTEE: MURPHY TODD L						

BUILDING NOTES

BUILDING DIMENSIONS

BAS=[YR=1993] W4 N1 W8 S1 W4 S4 W3 S11 DCK=[YR=2013] W6 S7 W6 N7 W4 S3 W23 S9 FSP=[YR=1993] W17 S6 E19 N6 W2$ E2 S8 E21 N8 E19 N9 W3 N3$ S3 E3 S9 W19 S8 W21 N2 W19 S6 W6 S12 FOP=[YR=1993] W4 S3 E4 N3$ S3 W4 S9 E19 FOP=[YR=1993] S19 FGR=[YR=1993] W14 S24 E27 N24 W13$ E5 N24 W5 S5$ N5 E19 S2 E7 N2 E6 FOP=[YR=1993] S8 E12 U5 L5 N3 W7$ E7 S3 D5 R5 E10 N8 E12 N58$.

EXTRA FEATURES

LN	OB/XF CODE	DESCRIPTION	BLD	CAP	L	W	UNITS	UT	Adj R	ADJ UNIT PRICE	ORIG COND	YEAR ON	YEAR ACTUAL	Q	% COND	OB/XF MKT VALUE	NOTES
1	0500	FP-PRE FAB	0	100	0	0	1.00	UT	3,500.00	3,500.00	100	1983	1983	3	56	1,960	
2	0801	ASPHALT A	0	100	0	0	1,190.00	SF	3.00	3.00	100	1983	1983	3	50	1,785	
5	0300	BOAT DCK W	0	100	14	12	168.00	SF	40.00	40.00	100	1983	1983	3	20	1,344	
6	0300	BOAT DCK W	0	100	88	4	352.00	SF	40.00	40.00	100	1983	1983	3	20	2,816	
7	0303	FLT DOCK W	0	100	14	12	168.00	SF	26.00	26.00	100	1990	1990	3	20	874	
8	0311	WD GANG WY	0	100	0	0	19.00	SF	45.00	45.00	100	1990	1990	3	20	171	
9	0303	FLT DOCK W	0	100	30	8	240.00	SF	26.00	26.00	100	1990	1990	3	20	1,248	
10	0920	CWALL-WD/M	0	100	0	0	82.00	LF	390.00	390.00	100	1990	1990	3	20	6,396	
11	0877	JACUZZI	0	100	0	0	1.00	UT	1,000.00	1,000.00	100	2000	2000	3	20	200	
12	0881	FOUNTAIN	0	100	0	0	1.00	UT	0.00	0.00	100	2005	2005	3	100	0	

TOTAL OB/XF 16,794

LAND DESCRIPTION

LN	USE CODE	CLS	LAND USE DESCRIPTION	CAP	RD	LOC ZONE	FRONT	DEPTH	TOT LND UTS	UNIT TYPE	DT	DPTH FACT	% COND	TOT ADJ	UNIT PRICE	ADJ UNIT PRICE	LAND VALUE	OTHER ADJUSTMENTS AND NOTES	YEAR	DENSITY	DECL	FRZ	YR	CONSRV
1	000116	C	SFR MARSH	100			115.00	192.00	115.00	FF		1.00	1.00	1.00	4,500.00	4,500.00	517,500							

REVIEW DATE 07/16/2018 BY DJX Total Acres: 0.00 Total Land Value: 517,500 Market: 0 Agricultural: 0 Common: 517,500 PRINTED 08/02/2023 BY SYS

LOT 7
IN OR 1977/1571
OAK MARSH ESTATES PB 4/105

MURPHY TODD L
2054 OAK MARSH DR
FERNANDINA BEACH, FL 32034

2023

00-00-31-1510-0007-0000

BUILDING CHARACTERISTICS

ELEMENT	CD	CONSTRUCTION

DOR CODE	0100	SINGLE FAMILY	
MAP NUM		MKT AREA	01
NEIGHBORHOOD/LOC	1007.00		

AREA TYPE	TOTAL GROSS AREA	PCT OF BASE	TOT ADJ AREA	SUBAREA MARKET VALUE
TOTALS				

MARKET ADJUSTMENTS

TYPE	MDL	EFF. AREA	TOT ADJ PTS	EFF. BASE RATE	REPL. COST NEW	AYB	EYB	ECON	FNCT		NORM	% COND

BLD DATE		LGL DATE	
XF DATE		LAND DATE	
INC DATE		AG DATE	

NASSAU COUNTY PROPERTY

PAGE 2 of 2 2

VALUATION SUMMARY

VALUATION BY		STANDARD
Tax Group: 2	Tax Dist:	
BUILDING MARKET VALUE		387,037
TOTAL MARKET OB/XF VALUE		18,702
TOTAL LAND VALUE - MARKET		517,500
TOTAL MARKET VALUE		923,239
SOH/AGL Deduction		410,476
ASSESSED VALUE		512,763
TOTAL EXEMPTION VALUE	HX HB	50,000
BASE TAXABLE VALUE		462,763
TOTAL JUST VALUE		923,239
NCON VALUE		0
INCOME VALUE		
PREVIOUS YEAR MKT VALUE		881,699

PERMIT NUM	DESCRIPTION	AMT	ISSUED

SALES DATA

OFF RECORD Number	DATE	TYPE INST	Q / U	V / I	RSN CD	SALE PRICE
1977/1571	4/21/2015	WD	U	I	11	100
GRANTOR: JOYNER DONALD J & MAR						
GRANTEE: MURPHY TODD L						
1975/1515	4/21/2015	WD	Q	I	05	670,000
GRANTOR: JOYNER DONALD J & MAR						
GRANTEE: MURPHY TODD L						

BUILDING NOTES

BUILDING DIMENSIONS

EXTRA FEATURES

LN	OB/XF CODE	DESCRIPTION	BLD	CAP	L	W	UNITS	UT	Adj R	ADJ UNIT PRICE	ORIG COND	YEAR ON	YEAR ACTUAL	Q	% COND	OB/XF MKT VALUE	NOTES
13	1242	WD DECK A	0	100	0	0	724.00	SF	10.00	10.00	100	1983	1983	3	20	1,448	
14	1242	WD DECK A	0	100	17	4	68.00	SF	10.00	10.00	100	2000	2000	3	20	136	
15	1242	WD DECK A	0	100	12	3	36.00	SF	10.00	10.00	100	2000	2000	3	20	72	
16	1242	WD DECK A	0	100	8	4	32.00	SF	10.00	10.00	100	2000	2000	3	20	64	
17	1242	WD DECK A	0	100	0	0	94.00	SF	10.00	10.00	100	2000	2000	3	20	188	

LAND DESCRIPTION

TOTAL OB/XF 1,908

LN	USE CODE	CLS	LAND USE DESCRIPTION	CAP	RD	LOC ZONE	FRONT	DEPTH	TOT LND UTS	UNIT TYPE	DT	DPTH FACT	% COND	TOT ADJ	UNIT PRICE	ADJ UNIT PRICE	LAND VALUE	OTHER ADJUSTMENTS AND NOTES	YEAR	DENSITY	DECL	FRZ	YR	CONSRV

REVIEW DATE 07/16/2018 BY DJX Total Acres: 0.00 Total Land Value: 517,500 Market: 0 Agricultural: 0 Common: 517,500 PRINTED 08/02/2023 BY SYS