LOT 18A
IN OR 1715/1893
NATURES WALK PB5/202

EVERHART CHERYL L
1129-A NATURES WALK CT
FERNANDINA BEACH, FL 32034

2023

00-00-31-147L-018A-0000

BUILDING CHARACTERISTICS

ELEMENT	CD	CONSTRUCTION
Exterior Wall	05	AVERAGE 80
Exterior Wall	12	CEDAR 20
Roof Structur	03	GABLE/HIP 100
Roof Cover	03	COMP SHNGL 100
Interior Wall	05	DRYWALL 100
Interior Floo	14	CARPET 70
Interior Floo	11	CLAY TILE 30
Air Condition	03	CENTRAL 100
Heating Type	04	AIR DUCTED 100
Bedrooms		2 100
Bathrooms		2.5 100
Frame	02	WOOD FRAME 100
Stories	2.	2. 100
Units		0 100
Occupancy	00	NONE 100
Quality	02	Quality Level 02
DOR CODE	0100	SINGLE FAMILY
MAP NUM		MKT AREA 01
NEIGHBORHOOD/LOC	1029.00	

AREA TYPE	TOTAL GROSS AREA	PCT OF BASE	TOT ADJ AREA	SUBAREA MARKET VALUE
BAS	1,210	100	1,210	102,760
FGR	400	55	220	18,684
FOP	9	30	3	255
FUS	524	100	524	44,501
UEP	270	60	162	13,758
TOTALS	2,413		2,119	179,957

MARKET ADJUSTMENTS

TYPE	MDL	EFF. AREA	TOT ADJ PTS	EFF. BASE RATE	REPL. COST NEW	AYB	EYB	ECON	FNCT		NORM	% COND
0320	01	2,119	105.2961	100.03	211,964	1991	1991	0	0	0	15.10	84.90

1 TOWNHOUSE - 0% - 0 Heated Area: 1734 HX Base Yr

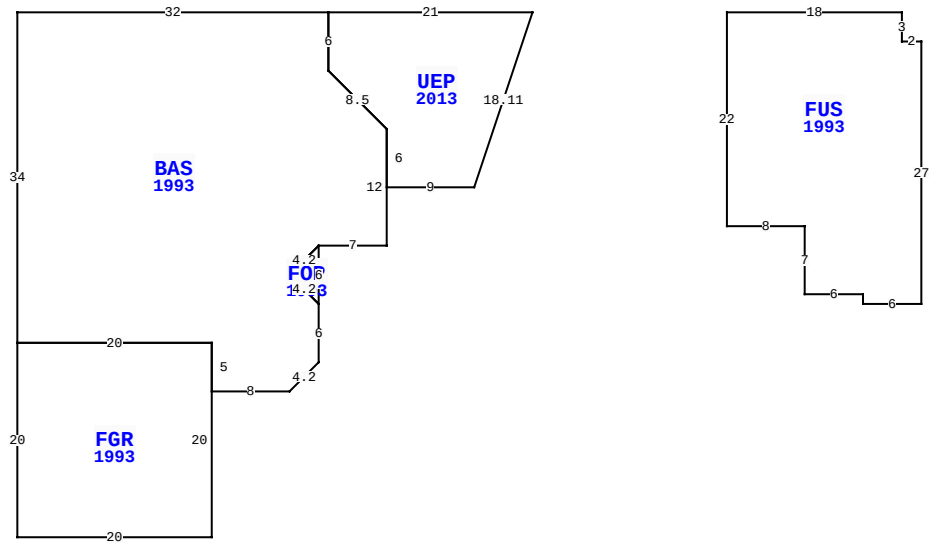

1129 NATURES WALK CT, FERNANDINA BEACH

BLD DATE		LGL DATE	
XF DATE		LAND DATE	
INC DATE		AG DATE	

NASSAU COUNTY PROPERTY

PAGE 1 of 1 2

VALUATION SUMMARY

VALUATION BY	STANDARD
Tax Group: 2	Tax Dist:
BUILDING MARKET VALUE	179,957
TOTAL MARKET OB/XF VALUE	1,987
TOTAL LAND VALUE - MARKET	105,000
TOTAL MARKET VALUE	286,944
SOH/AGL Deduction	0
ASSESSED VALUE	286,944
TOTAL EXEMPTION VALUE	0
BASE TAXABLE VALUE	286,944
TOTAL JUST VALUE	286,944
NCON VALUE	0
INCOME VALUE	
PREVIOUS YEAR MKT VALUE	316,047

PERMIT NUM	DESCRIPTION	AMT	ISSUED
20101895	REPAIR/RRF	3,000	11/01/2010
6659	NEW CONSTR	119,430	07/17/1991

SALES DATA

OFF RECORD Number	DATE	TYPE INST	Q / U	V / I	RSN CD	SALE PRICE
1715/1893	12/14/2010	QC	U	I	11	100
GRANTOR: BOZEMAN KAY S (EVERHA						
GRANTEE: BOZEMAN KAY S & CHE						
1711/1558	9/25/2010	QC	U	I	11	60,500
GRANTOR: BOZEMAN KAY S						
GRANTEE: BOZEMAN KAY S & CHE						

BUILDING NOTES

BUILDING DIMENSIONS

UEP=[YR=2013] W21 BAS=[YR=1993] W32 S34 FGR=[YR=1993] S20 E20 N20 W20$ E20 S5 E8 U3 R3 N6 FOP=[YR=1993] N6 L3 D3 D3 R3 $ L3 U3 U3 R3 E7 N12 U6 L6 N6$ S6 D6 R6 S6 E9 U18 R6 $ PTR=E20 FUS=[YR=1993] E18 S3 E2 S27 W6 N1 W6 N7 W8 N22$ W20 $.

EXTRA FEATURES

LN	OB/XF CODE	DESCRIPTION	BLD	CAP	L	W	UNITS	UT	Adj R	ADJ UNIT PRICE	ORIG COND	YEAR ON	YEAR ACTUAL	Q	% COND	OB/XF MKT VALUE	NOTES
1	0811	CONCRETE B	0	0	0	0	597.00	SF	5.20	5.20	100	1991	1991	3	64	1,987	

LAND DESCRIPTION

TOTAL OB/XF 1,987

LN	USE CODE	CLS	LAND USE DESCRIPTION	CAP	RD	LOC ZONE	FRONT	DEPTH	TOT LND UTS	UNIT TYPE	DT	DPTH FACT	% COND	TOT ADJ	UNIT PRICE	ADJ UNIT PRICE	LAND VALUE	OTHER ADJUSTMENTS AND NOTES	YEAR	DENSITY	DECL	FRZ	YR	CONSRV
1	000100	C	SFR	0	0006	R-1	0.00	0.00	1.00	UT		1.00	1.00	1.00	105,000.00	105,000.00	105,000							

REVIEW DATE 07/16/2018 BY DJX Total Acres: 0.00 Total Land Value: 105,000 Market: 0 Agricultural: 0 Common: 105,000 PRINTED 08/02/2023 BY SYS