LOT 22
IN OR 491/224 & OR 1699/431
NORTH POINTE PB 5/27

DAVIS JAMES S/DAVIS RICHARD T ET AL
566 WEST MAIN STREET
FOREST CITY, NC 28043

2023

00-00-31-1470-0022-0000

NASSAU COUNTY PROPERTY

BUILDING CHARACTERISTICS

ELEMENT	CD	CONSTRUCTION
Exterior Wall	10	ABOVE AVG 100
Roof Structur	03	GABLE/HIP 100
Roof Cover	03	COMP SHNGL 100
Interior Wall	05	DRYWALL 100
Interior Floo	14	CARPET 80
Interior Floo	08	SHT VINYL 20
Air Condition	03	CENTRAL 100
Heating Type	04	AIR DUCTED 100
Bedrooms		2 100
Bathrooms		2.5 100
Frame	07	SPECIAL 100
Stories	3.	3. 100
Units		0 100
BUD8 Adjustme	02	DIST FB 100
Quality	02	Quality Level 02

DOR CODE 0100 SINGLE FAMILY
MAP NUM | MKT AREA 01
NEIGHBORHOOD/LOC 1017.00

AREA TYPE	TOTAL GROSS AREA	PCT OF BASE	TOT ADJ AREA	SUBAREA MARKET VALUE
BAS	541	100	541	85,950
FCP	565	25	141	22,401
FOP	68	30	20	3,177
FST	20	55	11	1,748
FST	24	55	13	2,066
FUS	609	100	609	96,753
TOTALS	1,827		1,335	212,094

MARKET ADJUSTMENTS

TYPE	MDL	EFF. AREA	TOT ADJ PTS	EFF. BASE RATE	REPL. COST NEW	AYB	EYB	ECON	FNCT		NORM	% COND
0320	12	1,335	186.8568	177.51	236,976	1983	2000	0	0	0	10.50	89.50

1 TOWNHOUSE – 0% - 0 Heated Area: 1150 HX Base Yr

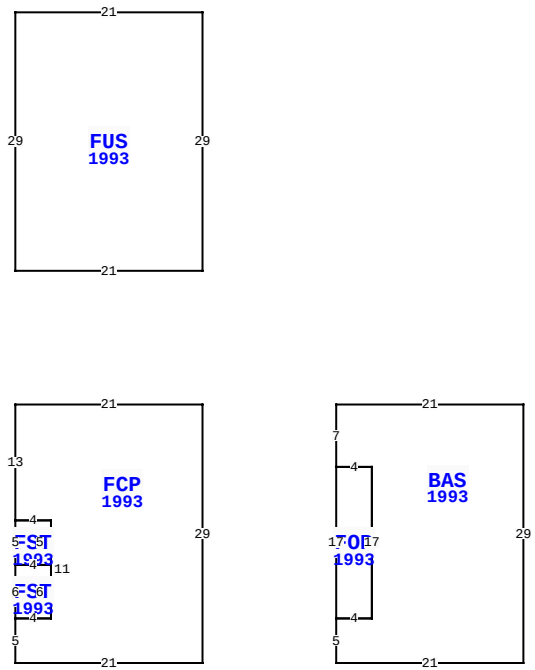

925 TARPON AV, FERNANDINA BEACH

BLD DATE		LGL DATE	
XF DATE		LAND DATE	
INC DATE		AG DATE	

VALUATION SUMMARY

VALUATION BY	STANDARD
Tax Group: 2	Tax Dist:
BUILDING MARKET VALUE	212,094
TOTAL MARKET OB/XF VALUE	1,117
TOTAL LAND VALUE - MARKET	150,000
TOTAL MARKET VALUE	363,211
SOH/AGL Deduction	115,451
ASSESSED VALUE	247,760
TOTAL EXEMPTION VALUE	0
BASE TAXABLE VALUE	247,760
TOTAL JUST VALUE	363,211
NCON VALUE	0
INCOME VALUE	
PREVIOUS YEAR MKT VALUE	287,148

PERMIT NUM	DESCRIPTION	AMT	ISSUED
20121069	H/AC	1,500	06/11/2012
20090063	RE-ROOF	2,300	01/16/2009

SALES DATA

OFF RECORD Number	DATE	TYPE INST	Q U	V I	RSN CD	SALE PRICE
1699/0431	8/26/2010	WD	U	I	16	25,000
GRANTOR: JOLLEY LAVONNE B & LE						
GRANTEE: DAVIS JAMES W & RIC						
0491/0224	6/01/1986	WD	U	I		10,000
GRANTOR:						
GRANTEE:						

BUILDING NOTES

BUILDING DIMENSIONS

FCP=[YR=1993] W21 S13 FST=[YR=1993] S5 FST=[YR=1993] S6 E4 N6 W4 $ E4 N5 W4 $ E4 S11 W4 S5 E21 N29 $ PTR= E15 BAS=[YR=1993] E21 S29 W21 N5 FOP=[YR=1993] E4 N17 W4 S17 $ E4 N17 W4 N7 $ W15 $ PTR= N15 FUS=[YR=1993] N29 W21 S29 E21 $ S15 $.

EXTRA FEATURES

LN	OB/XF CODE	DESCRIPTION	BLD	CAP	L	W	UNITS	UT	Adj R	ADJ UNIT PRICE	ORIG COND	YEAR ON	YEAR ACTUAL	Q	% COND	OB/XF MKT VALUE	NOTES
1	0810	CONCRETE A	0	0	10	28	280.00	SF	6.50	6.50	100	1983	1983	3	44	801	
4	1242	WD DECK A	0	0	5	21	105.00	SF	10.00	10.00	100	2005	2005	3	27	284	
5	1242	WD DECK A	0	0	3	4	12.00	SF	10.00	10.00	100	2005	2005	3	27	32	

LAND DESCRIPTION

TOTAL OB/XF 1,117

LN	USE CODE	CLS	LAND USE DESCRIPTION	CAP	RD	LOC ZONE	FRONT	DEPTH	TOT LND UTS	UNIT TYPE	DT	DPTH FACT	% COND	TOT ADJ	UNIT PRICE	ADJ UNIT PRICE	LAND VALUE	OTHER ADJUSTMENTS AND NOTES	YEAR	DENSITY	DECL	FRZ	YR	CONSRV
1	000100	C	SFR	0	0006	R-2	0.00	0.00	1.00	UT		1.00	1.00	1.00	150,000.00	150,000.00	150,000							

REVIEW DATE 08/18/2017 BY DJX Total Acres: 0.00 Total Land Value: 150,000 Market: 0 Agricultural: 0 Common: 150,000 PRINTED 08/02/2023 BY SYS