LOT 14
NORTH POINTE PB 5/27

SCHECTER 2014 FAMILY TRUST/SCHECTER EUGENE M TRUST
1830 PLANTATION OAKS DRIVE
JACKSONVILLE, FL 32223

2023

00-00-31-1470-0014-0000

NASSAU COUNTY PROPERTY

BUILDING CHARACTERISTICS

ELEMENT	CD	CONSTRUCTION
Exterior Wall	10	ABOVE AVG 100
Roof Structur	03	GABLE/HIP 100
Roof Cover	03	COMP SHNGL 100
Interior Wall	05	DRYWALL 100
Interior Floo	13	LVT/LAMNT 60
Interior Floo	14	CARPET 40
Air Condition	03	CENTRAL 100
Heating Type	04	AIR DUCTED 100
Bedrooms		2 100
Bathrooms		2.5 100
Frame	07	SPECIAL 100
Stories	3.	3. 100
Units		0 100
BUD8 Adjustme	02	DIST FB 100
Quality	02	Quality Level 02

DOR CODE 0100 SINGLE FAMILY
MAP NUM | MKT AREA 01
NEIGHBORHOOD/LOC 1017.00

AREA TYPE	TOTAL GROSS AREA	PCT OF BASE	TOT ADJ AREA	SUBAREA MARKET VALUE
BAS	541	100	541	86,864
FCP	565	25	141	22,639
FOP	68	30	20	3,211
FST	20	55	11	1,766
FST	24	55	13	2,087
FUS	609	100	609	97,783
TOTALS	1,827		1,335	214,352

MARKET ADJUSTMENTS

TYPE	MDL	EFF. AREA	TOT ADJ PTS	EFF. BASE RATE	REPL. COST NEW	AYB	EYB	ECON	FNCT		NORM	% COND
0320	12	1,335	188.8411	179.40	239,499	1982	2000	0	0	0	10.50	89.50

1 TOWNHOUSE – 0% - 0 Heated Area: 1150 HX Base Yr

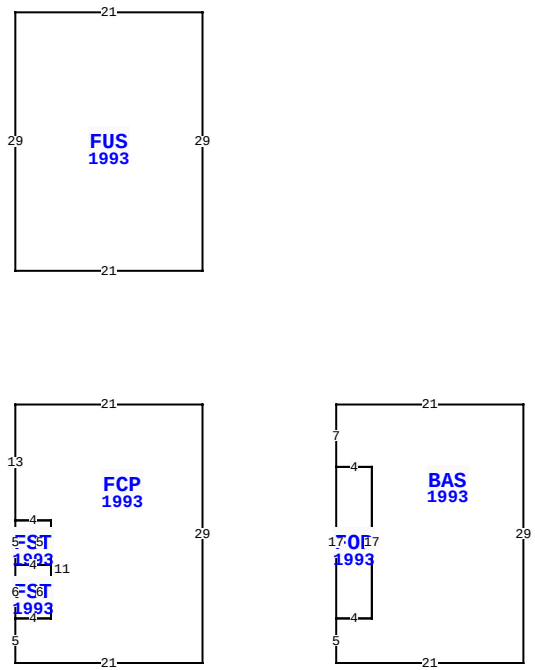

925 TARPON AV, FERNANDINA BEACH

BLD DATE	03/25/2014 KK	LGL DATE	
XF DATE		LAND DATE	
INC DATE		AG DATE	

NASSAU COUNTY PROPERTY — VALUATION SUMMARY

VALUATION BY	STANDARD
Tax Group: 2	Tax Dist:
BUILDING MARKET VALUE	214,352
TOTAL MARKET OB/XF VALUE	3,124
TOTAL LAND VALUE - MARKET	150,000
TOTAL MARKET VALUE	367,476
SOH/AGL Deduction	94,900
ASSESSED VALUE	272,576
TOTAL EXEMPTION VALUE	0
BASE TAXABLE VALUE	272,576
TOTAL JUST VALUE	367,476
NCON VALUE	0
INCOME VALUE	
PREVIOUS YEAR MKT VALUE	296,902

PERMIT NUM	DESCRIPTION	AMT	ISSUED
20101720	H/AC	1,933	10/05/2010
20052680	REMODEL	2,000	09/20/2005

SALES DATA

OFF RECORD Number	DATE	TYPE INST	Q U /	V I /	RSN CD	SALE PRICE
2271/1724	4/30/2019	WD	Q	I	01	275,000
GRANTOR: BUTLER JEFFREY M & PA						
GRANTEE: SCHECTER 2014 FAMIL						
2062/0252	8/01/2016	WD	Q	I	01	165,000
GRANTOR: POULIOT PATRICIA A						
GRANTEE: BUTLER JEFFREY MICH						

BUILDING NOTES

BUILDING DIMENSIONS

FCP=[YR=1993] W21 S13 FST=[YR=1993] S5 FST=[YR=1993] S6 E4 N6 W4 $ E4 N5 W4 $ E4 S11 W4 S5 E21 N29 $ PTR= E15 BAS=[YR=1993] E21 S29 W21 N5 FOP=[YR=1993] E4 N17 W4 S17 $ E4 N17 W4 N7 $ W15 $ PTR= N15 FUS=[YR=1993] N29 W21 S29 E21 $ S15 $.

EXTRA FEATURES

LN	OB/XF CODE	DESCRIPTION	BLD	CAP	L	W	UNITS	UT	Adj R	ADJ UNIT PRICE	ORIG COND	YEAR ON	YEAR ACTUAL	Q	% COND	OB/XF MKT VALUE	NOTES
1	0500	FP-PRE FAB	0	0	0	0	1.00	UT	3,500.00	3,500.00	100	1982	1982	3	54	1,890	
2	0810	CONCRETE A	0	0	11	28	308.00	SF	6.50	6.50	100	1982	1982	3	41	821	
3	1242	WD DECK A	0	0	5	21	105.00	SF	13.50	13.50	100	2005	2005	3	27	383	
4	1242	WD DECK A	0	0	3	4	12.00	SF	12.50	12.50	100	1982	1982	3	20	30	

LAND DESCRIPTION

TOTAL OB/XF 3,124

LN	USE CODE	CLS	LAND USE DESCRIPTION	CAP	RD	LOC ZONE	FRONT	DEPTH	TOT LND UTS	UNIT TYPE	DT	DPTH FACT	% COND	TOT ADJ	UNIT PRICE	ADJ UNIT PRICE	LAND VALUE	OTHER ADJUSTMENTS AND NOTES	YEAR	DENSITY	DECL	FRZ	YR	CONSRV
1	000100	C	SFR	0	0006	R-2	0.00	0.00	1.00	UT		1.00	1.00	1.00	150,000.00	150,000.00	150,000							

REVIEW DATE 12/09/2022 BY TWA Total Acres: 0.00 Total Land Value: 150,000 Market: 0 Agricultural: 0 Common: 150,000 PRINTED 08/02/2023 BY SYS