PT LOT 84 IN OR 2582/1387,
LOT 85 & PT SEC 20-3N-29E
IN OR 2294/397

SEDER MICHELLE &/DOONER KEVIN D
1401 S FLETCHER AVE
FERNANDINA BEACH, FL 32034-2320

2023

00-00-31-1460-0085-0000

BUILDING CHARACTERISTICS

ELEMENT	CD	CONSTRUCTION
Exterior Wall	16	WD FR STUC 70
Exterior Wall	23	REINF CONC 30
Roof Structur	02	SHED 100
Roof Cover	04	BUILT-UP 100
Interior Wall	05	DRYWALL 100
Interior Floo	11	CLAY TILE 100
Air Condition	03	CENTRAL 100
Heating Type	04	AIR DUCTED 100
Bedrooms		1 100
Bathrooms		2 100
Frame	02	WOOD FRAME 100
Stories	3.	3. 100
Units		0 100
Occupancy	00	NONE 100
Quality	03	Quality Level 03
DOR CODE	0100	SINGLE FAMILY
MAP NUM		MKT AREA 01
NEIGHBORHOOD/LOC	1057.00	

AREA TYPE	TOTAL GROSS AREA	PCT OF BASE	TOT ADJ AREA	SUBAREA MARKET VALUE
BAS	500	100	500	68,586
FOP	140	30	42	5,761
FUS	500	100	500	68,586
FUS	500	100	500	68,586
PTO	740	5	37	5,076
UOP	140	20	28	3,841
UST	80	45	36	4,939
TOTALS	2,600		1,643	225,373

MARKET ADJUSTMENTS

TYPE	MDL	EFF. AREA	TOT ADJ PTS	EFF. BASE RATE	REPL. COST NEW	AYB	EYB	ECON	FNCT		NORM	% COND
0900	01	1,643	125.5620	149.10	244,971	2006	2006	0	0	0	8.00	92.00

2 SNGL FAM – 100% - 2009 Heated Area: 1500 HX Base Yr 2009

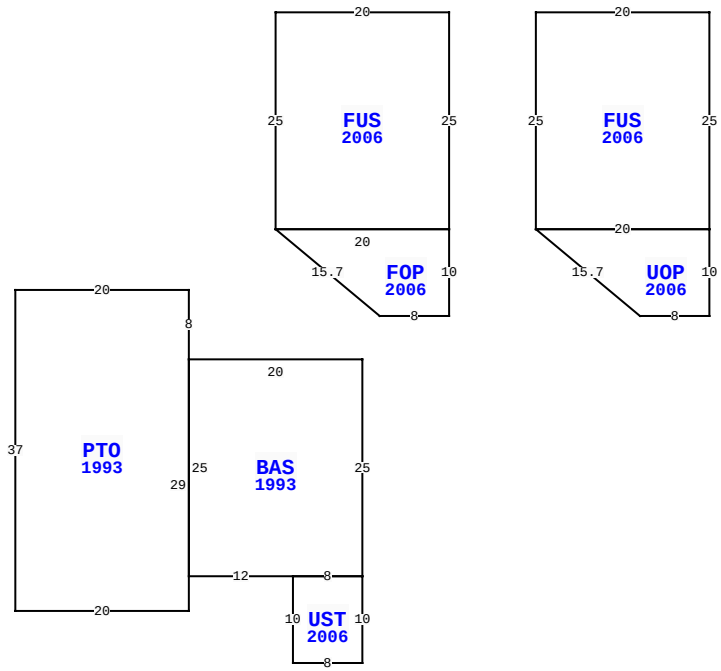

1401 S FLETCHER AVE, FERNANDINA BEACH

BLD DATE		LGL DATE	
XF DATE		LAND DATE	
INC DATE		AG DATE	

NASSAU COUNTY PROPERTY

PAGE 1 of 2 2

VALUATION SUMMARY

VALUATION BY		STANDARD
Tax Group: 2	Tax Dist:	
BUILDING MARKET VALUE		265,795
TOTAL MARKET OB/XF VALUE		26,686
TOTAL LAND VALUE - MARKET		426,000
TOTAL MARKET VALUE		718,481
SOH/AGL Deduction		371,911
ASSESSED VALUE		346,570
TOTAL EXEMPTION VALUE	HX HB	50,000
BASE TAXABLE VALUE		296,570
TOTAL JUST VALUE		718,481
NCON VALUE		0
INCOME VALUE		
PREVIOUS YEAR MKT VALUE		970,854

PERMIT NUM	DESCRIPTION	AMT	ISSUED
20222714	600 & FST & BATHR	130,000	02/20/2023
20222633	9965T 7175H	1,750,000	11/10/2022
20220108	DEMOLITION	0	10/14/2022
20200293	NEW CONSTR	57,960	09/02/2020
20100158	REPLACE PIPING &	1,800	01/29/2010
20100147	REPAIR FIRE DAMAG	10,000	01/28/2010

SALES DATA

OFF RECORD Number	DATE	TYPE INST	Q / U	V / I	RSN CD	SALE PRICE
2582/1387	8/02/2022	QC	U	V	11	100
GRANTOR: HUGHES SCOTT & FRANCE						
GRANTEE: DOONER KEVIN DONALD						
2294/0397	6/19/2019	WD	U	I	11	100
GRANTOR: SEDER MICHELLE & KEVI						
GRANTEE: DOONER KEVIN D & MI						

BUILDING NOTES

BUILDING DIMENSIONS

BAS=[YR=1993] W20 PTO=[YR=1993] N8W20S37 E20N29$ S25 E12 UST=[YR=2006] S10E8 N10 W8$E8N25$ PTR=N15W10 FUS=[YR=2006] N25E20S25FOP=[YR=2006] S10W8 U10 L12 E20$W20$ S15E10$ PTR= N15E20 FUS=[YR=2006] N25E20 S25 UOP=[YR=2006] S10W8 U10 L12 E20$W20 $ W20S15$.

EXTRA FEATURES

LN	OB/XF CODE	DESCRIPTION	BLD	CAP	L	W	UNITS	UT	Adj R	ADJ UNIT PRICE	ORIG COND	YEAR ON	YEAR ACTUAL	Q	% COND	OB/XF MKT VALUE	NOTES
1	0855	CONC PAVER	0	100	0	0	249.00	SF	10.00	10.00	100	2021	2021	3	100	2,490	
11	0810	CONCRETE A	0	100	0	0	4,230.00	SF	6.50	6.50	100	2006	2006	3	88	24,196	

LAND DESCRIPTION

TOTAL OB/XF 26,686

LN	USE CODE	CLS	LAND USE DESCRIPTION	CAP	RD	LOC ZONE	FRONT	DEPTH	TOT LND UTS	UNIT TYPE	DT	DPTH FACT	% COND	TOT ADJ	UNIT PRICE	ADJ UNIT PRICE	LAND VALUE	OTHER ADJUSTMENTS AND NOTES	YEAR	DENSITY	DECL	FRZ	YR	CONSRV
1	000800	C	MULTI-FAM	100	0006	R-1	71.00	250.00	71.00	FF		1.00	1.00	1.00	6,000.00	6,000.00	426,000							

REVIEW DATE 12/13/2022 BY TW Total Acres: 0.00 Total Land Value: 426,000 Market: 0 Agricultural: 0 Common: 426,000 PRINTED 08/02/2023 BY SYS

PT LOT 84 IN OR 2582/1387,
LOT 85 & PT SEC 20-3N-29E
IN OR 2294/397

SEDER MICHELLE &/DOONER KEVIN D
1401 S FLETCHER AVE
FERNANDINA BEACH, FL 32034-2320

2023

00-00-31-1460-0085-0000

BUILDING CHARACTERISTICS

ELEMENT	CD	CONSTRUCTION
Exterior Wall	16	WD FR STUC 100
Roof Structur	02	SHED 100
Roof Cover	12	MODULAR MT 100
Interior Wall	05	DRYWALL 100
Interior Floo	03	CONC FINSH 100
Air Condition	01	NONE 100
Heating Type	01	NONE 100
Bedrooms		0 100
Bathrooms		0 100
Frame	02	WOOD FRAME 100
Stories	2.	2. 100
Units		0 100
Occupancy	00	NONE 100
Quality	04	Quality Level 04

DOR CODE	0100	SINGLE FAMILY	
MAP NUM		MKT AREA	01
NEIGHBORHOOD/LOC	1057.00		

AREA TYPE	TOTAL GROSS AREA	PCT OF BASE	TOT ADJ AREA	SUBAREA MARKET VALUE
BAS	600	100	600	26,740
STR	68	10	7	312
UUS	600	50	300	13,370
TOTALS	1,268		907	40,422

MARKET ADJUSTMENTS

TYPE	MDL	EFF. AREA	TOT ADJ PTS	EFF. BASE RATE	REPL. COST NEW	AYB	EYB	ECON	FNCT		NORM	% COND
0150	01	907	89.5860	44.79	40,625	2021	2021	0	0	0	0.50	99.50

3 ACCESORY U – 100% - 2009 Heated Area: 600 HX Base Yr 2009

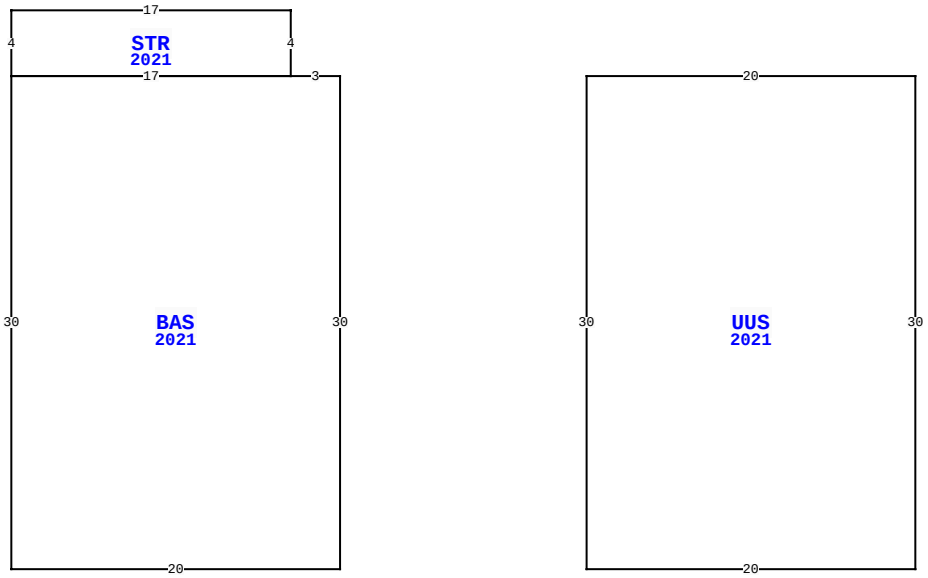

1401 S FLETCHER AVE, FERNANDINA BEACH

BLD DATE		LGL DATE	
XF DATE		LAND DATE	
INC DATE		AG DATE	

NASSAU COUNTY PROPERTY

PAGE 2 of 2 2

VALUATION SUMMARY

VALUATION BY		STANDARD
Tax Group: 2	Tax Dist:	
BUILDING MARKET VALUE		265,795
TOTAL MARKET OB/XF VALUE		26,686
TOTAL LAND VALUE - MARKET		426,000
TOTAL MARKET VALUE		718,481
SOH/AGL Deduction		371,911
ASSESSED VALUE		346,570
TOTAL EXEMPTION VALUE	HX HB	50,000
BASE TAXABLE VALUE		296,570
TOTAL JUST VALUE		718,481
NCON VALUE		0
INCOME VALUE		
PREVIOUS YEAR MKT VALUE		970,854

PERMIT NUM	DESCRIPTION	AMT	ISSUED
20100001	DEMOLISH DAMAGED	1,400	01/04/2010
20061623	OTHER	2,000	07/10/2006
20061624	REMODEL	2,000	07/10/2006
20061126	H/AC	4,500	05/24/2006
20061008	REMODEL	2,800	05/12/2006
20060930	ADDITION	28,700	04/28/2006

SALES DATA

OFF RECORD Number	DATE	TYPE INST	Q / U	V / I	RSN CD	SALE PRICE
2582/1387	8/02/2022	QC	U	V	11	100
GRANTOR: HUGHES SCOTT & FRANCE						
GRANTEE: DOONER KEVIN DONALD						
2294/0397	6/19/2019	WD	U	I	11	100
GRANTOR: SEDER MICHELLE & KEVI						
GRANTEE: DOONER KEVIN D & MI						

BUILDING NOTES

BUILDING DIMENSIONS

BAS=[YR=2021] W3 STR=[YR=2021] N4 W17 S4 E17$ W17 S30 E20 N30$ PTR=E15 UUS=[YR=2021] E20 S30 W20 N30$ W15$.

EXTRA FEATURES

L N	OB/XF CODE	DESCRIPTION	BLD	CAP	L	W	UNITS	UT	Adj R	ADJ UNIT PRICE	ORIG COND	YEAR ON	YEAR ACTUAL	Q	% COND	OB/XF MKT VALUE	NOTES

LAND DESCRIPTION

TOTAL OB/XF 0

L N	USE CODE	CLS	LAND USE DESCRIPTION	CAP	R D	LOC ZONE	FRONT	DEPTH	TOT LND UTS	UNIT TYPE	D T	DPTH FACT	% COND	TOT ADJ	UNIT PRICE	ADJ UNIT PRICE	LAND VALUE	OTHER ADJUSTMENTS AND NOTES	YEAR	DENSITY	DECL	FRZ	YR	CONSRV

REVIEW DATE 12/13/2022 BY TW Total Acres: 0.00 Total Land Value: 426,000 Market: 0 Agricultural: 0 Common: 426,000 PRINTED 08/02/2023 BY SYS