LOT 81
IN OR 2167/1288
MIRAMAR BEACH PB 2/61

PALMER MARY ANN REV TRUST/PALMER MARY ANN TRUSTEE
1450 S FLETCHER AVE
FERNANDINA BEACH, FL 32034

2023

00-00-31-1460-0081-0000

BUILDING CHARACTERISTICS

ELEMENT	CD	CONSTRUCTION
Exterior Wall	16	WD FR STUC 90
Exterior Wall	10	ABOVE AVG 10
Roof Structur	03	GABLE/HIP 100
Roof Cover	07	CONC TILE 100
Interior Wall	05	DRYWALL 100
Interior Floo	13	LVT/LAMNT 80
Interior Floo	11	CLAY TILE 20
Air Condition	03	CENTRAL 100
Heating Type	04	AIR DUCTED 100
Bedrooms		4 100
Bathrooms		5.5 100
Frame	03	MASONRY 100
Stories	3.	3. 100
Units		0 100
Quality	04	Quality Level 04
DOR CODE	0100	SINGLE FAMILY
MAP NUM		MKT AREA 01
NEIGHBORHOOD/LOC	1057.00	

AREA TYPE	TOTAL GROSS AREA	PCT OF BASE	TOT ADJ AREA	SUBAREA MARKET VALUE
BAL	153	15	23	4,817
BAS	42	100	42	8,796
BAS	183	100	183	38,326
DCK	182	10	18	3,770
DCK	228	10	23	4,817
FGR	3,225	55	1,774	371,529
FOP	12	30	4	838
FOP	63	30	19	3,979
FOP	66	30	20	4,189
FOP	162	30	49	10,262
TOTALS	10,740		7,256	1,519,624

MARKET ADJUSTMENTS

TYPE	MDL	EFF. AREA	TOT ADJ PTS	EFF. BASE RATE	REPL. COST NEW	AYB	EYB	ECON	FNCT		NORM	% COND
0500	11	7,256	146.9688	209.43	1,519,624	2022	2022	0	0	0	0.00	100.00

1 SFR CUST – 0% - 0 Heated Area: 4773 HX Base Yr

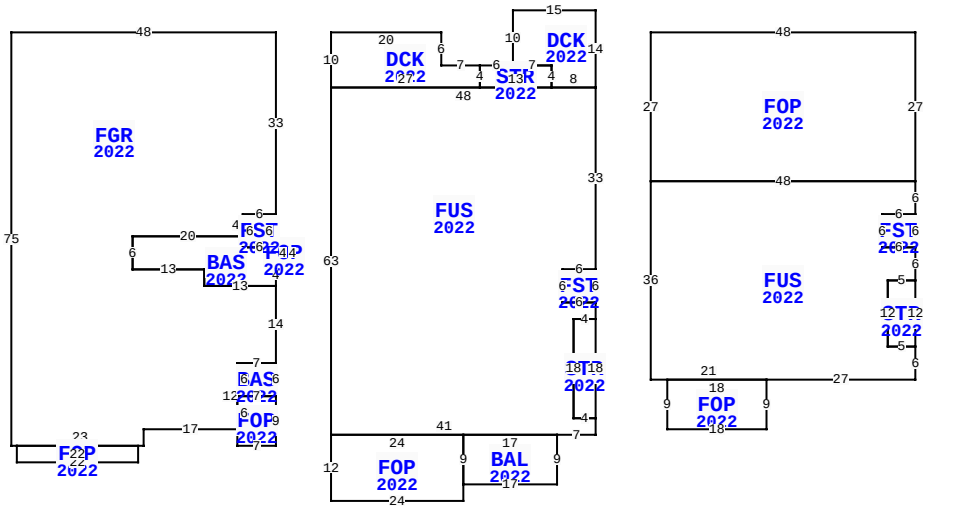

** This building has 20 Sub-Areas

1449 S FLETCHER AVE, FERNANDINA BEACH

BLD DATE		LGL DATE	
XF DATE		LAND DATE	
INC DATE		AG DATE	

NASSAU COUNTY PROPERTY

PAGE 1 of 1 2

VALUATION SUMMARY

VALUATION BY	STANDARD
Tax Group: 2	Tax Dist:
BUILDING MARKET VALUE	1,519,624
TOTAL MARKET OB/XF VALUE	28,350
TOTAL LAND VALUE - MARKET	432,000
TOTAL MARKET VALUE	1,979,974
SOH/AGL Deduction	31,526
ASSESSED VALUE	1,948,448
TOTAL EXEMPTION VALUE	0
BASE TAXABLE VALUE	1,948,448
TOTAL JUST VALUE	1,979,974
NCON VALUE	1,541,162
INCOME VALUE	
PREVIOUS YEAR MKT VALUE	432,000

PERMIT NUM	DESCRIPTION	AMT	ISSUED
20200570	NEW CONSTR	0	11/05/2020

SALES DATA

OFF RECORD Number	DATE	TYPE INST	Q U	V I	RSN CD	SALE PRICE
2167/1288	1/03/2018	WD	Q	V	01	325,000
GRANTOR: BLACK DAVID CLIFTON &						
GRANTEE: PALMER MARY ANN REV						
2059/0696	7/18/2016	WD	Q	V	01	300,000
GRANTOR: STURGES DAVID K JR ET						
GRANTEE: BLACK DAVID CLIFTON						

BUILDING NOTES

BUILDING DIMENSIONS

FGR=[YR=2022] W48 S75 E1 FOP=[YR=2022] S3 E22 N3 W22$ E23 N3 E17 FOP=[YR=2022] S3 E7 N9 BAS=[YR=2022] N6W7 S6E7$ W7 S6$ N12 E7 N14 BAS=[YR=2022] N4 FOP=[YR=2022] E3N4W3S4$ N3 FST=[YR=2022] N6W6S6E6$ W6N2 W20 S6 E13 S3 E13$ W13 N3 W13 N6 E20 N4 E6 N33$ PTR=E10 DCK=[YR=2022] E20 S6 E7 STR=[YR=2022] E6 DCK=[YR=2022] N10 E15 S14 FUS=[YR=2022] S33 FST=[YR=2022] S6W6N6E6$ W6S6E6 S3 STR=[YR=2022] S18 W4 N18 E4$ W4 S18 E4 S3 W7 BAL=[YR=2022] S9W17 FOP=[YR=2022] S3 W24 N12 E24 S9$ N9 E17$ W41 N63 E48$ W8N4W7$ E7S4 W13N4$ S4W27N10$ W10$ PTR=E68 FOP=[YR=2022] E48 S27 FUS=[YR=2022] S6 FST=[YR=2022] S6W6N6E6$ W6S6E6 S6 STR=[YR=2022] S12 W5 N12 E5$ W5 S12 E5 S6 W27 FOP=[YR=2022] S9W18N9E18$ W21 N36 E48$ W48 N27$ W68$.

EXTRA FEATURES

LN	OB/XF CODE	DESCRIPTION	BLD	CAP	L	W	UNITS	UT	Adj R	ADJ UNIT PRICE	ORIG COND	YEAR ON	YEAR ACTUAL	Q	% COND	OB/XF MKT VALUE	NOTES
1	0855	CONC PAVER	0	0	0	0	582.00	SF	10.00	10.00	100	2022	2022	3	100	5,820	
2	0855	CONC PAVER	0	0	0	0	1,506.00	SF	5.00	5.00	100	2022	2022	3	100	7,530	
3	0501	FP-AVERAGE	0	0	0	0	1.00	UT	5,000.00	5,000.00	100	2022	2022	3	100	5,000	
4	0410	ELEVATOR	0	0	0	0	1.00	UT	10,000.00	10,000.00	100	2022	2022	3	100	10,000	

LAND DESCRIPTION

TOTAL OB/XF 28,350

LN	USE CODE	CLS	LAND USE DESCRIPTION	CAP	RD	LOC ZONE	FRONT	DEPTH	TOT LND UTS	UNIT TYPE	DT	DPTH FACT	% COND	TOT ADJ	UNIT PRICE	ADJ UNIT PRICE	LAND VALUE	OTHER ADJUSTMENTS AND NOTES	YEAR	DENSITY	DECL	FRZ	YR	CONSRV
1	000100	C	SFR	0	0006	R-1	72.00	125.00	72.00	FF		1.00	1.00	1.00	6,000.00	6,000.00	432,000							

REVIEW DATE 02/23/2023 BY DJ Total Acres: 0.00 Total Land Value: 432,000 Market: 0 Agricultural: 0 Common: 432,000 PRINTED 08/02/2023 BY SYS