LOT 64 &
PARCEL 20 SEC 20-3N-29
IN OR 1758/198

LUKANUS JOSEPH S & SUSAN A
1745 S FLETCHER AV
FERNANDINA BEACH, FL 32034

2023

00-00-31-1460-0064-0000

BUILDING CHARACTERISTICS

ELEMENT	CD	CONSTRUCTION
Exterior Wall	23	REINF CONC 100
Roof Structur	08	IRREGULAR 100
Roof Cover	12	MODULAR MT 100
Interior Wall	05	DRYWALL 100
Interior Floo	15	HARDTILE 70
Interior Floo	14	CARPET 30
Air Condition	03	CENTRAL 100
Heating Type	04	AIR DUCTED 100
Bedrooms		3 100
Bathrooms		3 100
Frame	04	REIN CONC 100
Stories	2.	2. 100
Units		0 100
BUD8 Adjustme	02	DIST FB 100
Occupancy	00	NONE 100
Quality	04	Quality Level 04
DOR CODE	0100	SINGLE FAMILY
MAP NUM		MKT AREA 01
NEIGHBORHOOD/LOC	1057.00	

AREA TYPE	TOTAL GROSS AREA	PCT OF BASE	TOT ADJ AREA	SUBAREA MARKET VALUE
BAS	1,170	100	1,170	142,455
FGR	808	55	444	54,060
FOP	144	30	43	5,235
FOP	144	30	43	5,235
FOP	180	30	54	6,574
FOP	180	30	54	6,574
FUS	2,057	100	2,057	250,454
PTO	222	5	11	1,339
SFB	80	80	64	7,792
SFB	90	80	72	8,767
TOTALS	5,075		4,012	488,488

MARKET ADJUSTMENTS

TYPE	MDL	EFF. AREA	TOT ADJ PTS	EFF. BASE RATE	REPL. COST NEW	AYB	EYB	ECON	FNCT		NORM	% COND
0900	01	4,012	116.5164	138.36	555,100	1998	1998	0	0	0	12.00	88.00

1 SNGL FAM – 100% - 2013 Heated Area: 3363 HX Base Yr 2013

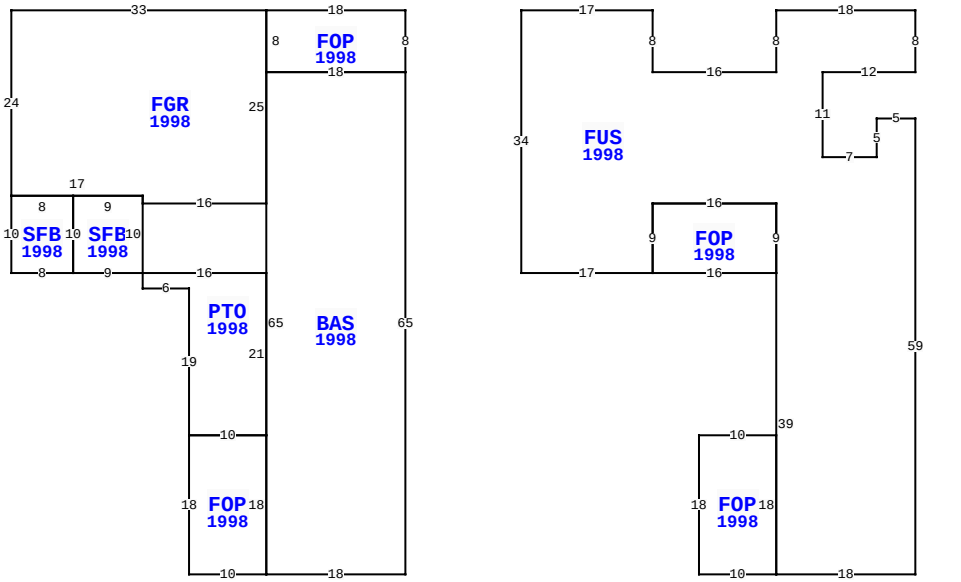

1745 S FLETCHER AVE, FERNANDINA BEACH

BLD DATE		LGL DATE	
XF DATE		LAND DATE	
INC DATE		AG DATE	

NASSAU COUNTY PROPERTY

PAGE 1 of 2 2

VALUATION SUMMARY

VALUATION BY		STANDARD
Tax Group: 2	Tax Dist:	
BUILDING MARKET VALUE		488,488
TOTAL MARKET OB/XF VALUE		69,757
TOTAL LAND VALUE - MARKET		508,200
TOTAL MARKET VALUE		1,066,445
SOH/AGL Deduction		537,382
ASSESSED VALUE		529,063
TOTAL EXEMPTION VALUE	HX HB	50,000
BASE TAXABLE VALUE		479,063
TOTAL JUST VALUE		1,066,445
NCON VALUE		0
INCOME VALUE		
PREVIOUS YEAR MKT VALUE		999,357

PERMIT NUM	DESCRIPTION	AMT	ISSUED
20111055	H/AC	6,000	06/27/2011
20101130	REPLACE 200AMP DI	350	07/13/2010
971005B	SWIM POOL	14,926	11/18/1997
9710438B	NEW CONSTR	180,000	04/18/1997
969668	DEMOLISH HOME	5,000	03/13/1996

SALES DATA

OFF RECORD Number	DATE	TYPE INST	Q / U	V / I	RSN CD	SALE PRICE
1758/0198	9/29/2011	WD	Q	I	02	700,000
GRANTOR: LEEPER WILLIAM H & EM						
GRANTEE: LUKANUS JOSEPH S &						
0543/0898	5/20/1988	WD	Q	I		110,000
GRANTOR: WEATHERFORD J E						
GRANTEE: LEEPER WM H						

BUILDING NOTES

BUILDING DIMENSIONS

FOP=[YR=1998] W18 FGR=[YR=1998] W33 S24 SFB=[YR=1998] S10 E8 SFB=[YR=1998] E9 PTO=[YR=1998] S2 E6 S19 FOP=[YR=1998] S18 E10 BAS=[YR=1998] E18 N65 W18 S65 $ N18 W10 $ E10 N21 W16 $ N10 W9 S10 $ N10 W8 $ E17 S1 E16 N25 $ S8 E18 N8 $ PTR= E15 FUS=[YR=1998] E17 S8 E16 N8 E18 S8 W12 S11 E7 N5 E5 S59 W18 FOP=[YR=1998] W10 N18 E10 S18 $ N39 FOP=[YR=1998] N9 W16 S9 E16 $ N9 W16 S9 W17 N34 $ W15 $.

EXTRA FEATURES

LN	OB/XF CODE	DESCRIPTION	BLD	CAP	L	W	UNITS	UT	Adj R	ADJ UNIT PRICE	ORIG COND	YEAR ON	YEAR ACTUAL	Q	% COND	OB/XF MKT VALUE	NOTES
5	0861	POOL GUNIT	0	100	13	23	299.00	SF	85.00	85.00	100	1998	1998	3	23	5,845	
6	0845	KOOL DECK	0	100	0	0	877.00	SF	14.50	14.50	100	1998	1998	3	77	9,792	
7	0810	CONCRETE A	0	100	4	29	116.00	SF	6.50	6.50	100	1998	1998	3	77	581	
8	0858	SCULP CONC	0	100	0	0	3,660.00	SF	13.00	13.00	100	1998	1998	3	93	44,249	
9	0810	CONCRETE A	0	100	7	13	91.00	SF	6.50	6.50	100	1998	1998	3	77	455	
10	0810	CONCRETE A	0	100	12	10	120.00	SF	6.50	6.50	100	1998	1998	3	77	601	
11	0940	SHEDS/PORT	0	100	14	10	140.00	SF	30.00	30.00	100	1999	1999	3	20	840	
12	0810	CONCRETE A	0	100	3	10	30.00	SF	6.50	6.50	100	1998	1998	3	77	150	
13	0835	QUARY TILE	0	100	12	5	60.00	SF	10.00	10.00	100	1998	1998	3	77	462	
14	0877	JACUZZI	0	100	0	0	1.00	UT	1,000.00	1,000.00	100	1998	1998	3	20	200	

TOTAL OB/XF 63,175

LAND DESCRIPTION

LN	USE CODE	CLS	LAND USE DESCRIPTION	CAP	RD	LOC ZONE	FRONT	DEPTH	TOT LND UTS	UNIT TYPE	DT	DPTH FACT	% COND	TOT ADJ	UNIT PRICE	ADJ UNIT PRICE	LAND VALUE	OTHER ADJUSTMENTS AND NOTES	YEAR	DENSITY	DECL	FRZ	YR	CONSRV
1	000100	C	SFR	100	0006	R-1	70.00	250.00	70.00	FF		1.00	1.00	1.21	6,000.00	7,260.00	508,200							

REVIEW DATE 11/15/2018 BY DJX Total Acres: 0.00 Total Land Value: 508,200 Market: 0 Agricultural: 0 Common: 508,200 PRINTED 08/02/2023 BY SYS

LOT 64 &
PARCEL 20 SEC 20-3N-29
IN OR 1758/198

LUKANUS JOSEPH S & SUSAN A
1745 S FLETCHER AV
FERNANDINA BEACH, FL 32034

2023

00-00-31-1460-0064-0000

BUILDING CHARACTERISTICS

ELEMENT	CD	CONSTRUCTION

DOR CODE	0100	SINGLE FAMILY	
MAP NUM		MKT AREA	01
NEIGHBORHOOD/LOC	1057.00		

AREA TYPE	TOTAL GROSS AREA	PCT OF BASE	TOT ADJ AREA	SUBAREA MARKET VALUE
TOTALS				

MARKET ADJUSTMENTS

TYPE	MDL	EFF. AREA	TOT ADJ PTS	EFF. BASE RATE	REPL. COST NEW	AYB	EYB	ECON	FNCT		NORM	% COND

BLD DATE		LGL DATE	
XF DATE		LAND DATE	
INC DATE		AG DATE	

NASSAU COUNTY PROPERTY

PAGE 2 of 2 2

VALUATION SUMMARY

VALUATION BY		STANDARD
Tax Group: 2	Tax Dist:	
BUILDING MARKET VALUE		488,488
TOTAL MARKET OB/XF VALUE		69,757
TOTAL LAND VALUE - MARKET		508,200
TOTAL MARKET VALUE		1,066,445
SOH/AGL Deduction		537,382
ASSESSED VALUE		529,063
TOTAL EXEMPTION VALUE	HX HB	50,000
BASE TAXABLE VALUE		479,063
TOTAL JUST VALUE		1,066,445
NCON VALUE		0
INCOME VALUE		
PREVIOUS YEAR MKT VALUE		999,357

PERMIT NUM	DESCRIPTION	AMT	ISSUED

SALES DATA

OFF RECORD Number	DATE	TYPE INST	Q / U	V / I	RSN CD	SALE PRICE
1758/0198	9/29/2011	WD	Q	I	02	700,000
GRANTOR: LEEPER WILLIAM H & EM						
GRANTEE: LUKANUS JOSEPH S &						
0543/0898	5/20/1988	WD	Q	I		110,000
GRANTOR: WEATHERFORD J E						
GRANTEE: LEEPER WM H						

BUILDING NOTES

BUILDING DIMENSIONS

EXTRA FEATURES

LN	OB/XF CODE	DESCRIPTION	BLD	CAP	L	W	UNITS	UT	Adj R	ADJ UNIT PRICE	ORIG COND	YEAR ON	YEAR ACTUAL	Q	% COND	OB/XF MKT VALUE	NOTES
15	0968	STAIRS	0	100	0	0	1.00	SF	2,000.00	2,000.00	79	1999	1999	3	79	1,580	
16	1131	REINFR 8	0	100	88	7	616.00	SF	8.19	8.19	100	1998	1998	3	93	4,692	
17	1123	CB 8"	0	100	63	4	252.00	SF	6.15	6.15	100	1960	1960	3	20	310	

LAND DESCRIPTION

TOTAL OB/XF 6,582

LN	USE CODE	CLS	LAND USE DESCRIPTION	CAP	RD	LOC ZONE	FRONT	DEPTH	TOT LND UTS	UNIT TYPE	DT	DPTH FACT	% COND	TOT ADJ	UNIT PRICE	ADJ UNIT PRICE	LAND VALUE	OTHER ADJUSTMENTS AND NOTES	YEAR	DENSITY	DECL	FRZ	YR	CONSRV

REVIEW DATE 11/15/2018 BY DJX Total Acres: 0.00 Total Land Value: 508,200 Market: 0 Agricultural: 0 Common: 508,200 PRINTED 08/02/2023 BY SYS