N60 FT OF LOT 18
MIRAMAR BEACH PB 2/61

LALOLA RIVA LLC
777 UNIVERSITY AVENUE
MADISON, WI 53715

2023

00-00-31-1460-0018-0010

NASSAU COUNTY PROPERTY

BUILDING CHARACTERISTICS

ELEMENT	CD	CONSTRUCTION
Exterior Wall	10	ABOVE AVG 100
Roof Structur	08	IRREGULAR 100
Roof Cover	11	SLATE 100
Interior Wall	05	DRYWALL 100
Interior Floo	12	HARDWOOD 70
Interior Floo	11	CLAY TILE 30
Air Condition	03	CENTRAL 100
Heating Type	04	AIR DUCTED 100
Bedrooms		4 100
Bathrooms		3 100
Frame	02	WOOD FRAME 100
Stories	3.	3. 100
Units		0 100
Quality	04	Quality Level 04
DOR CODE	0100	SINGLE FAMILY
MAP NUM		MKT AREA 01
NEIGHBORHOOD/LOC	1051.00	

AREA TYPE	TOTAL GROSS AREA	PCT OF BASE	TOT ADJ AREA	SUBAREA MARKET VALUE
BAL	245	15	37	21,311
BAS	684	100	684	393,974
FGR	482	55	265	152,636
FOP	60	30	18	10,367
FST	24	55	13	7,488
FUS	1,034	100	1,034	595,569
FUS	1,074	100	1,074	618,608
STR	44	10	4	2,304
STR	48	10	5	2,880
STR	48	10	5	2,880
TOTALS	4,506		3,286	1,892,688

MARKET ADJUSTMENTS

TYPE	MDL	EFF. AREA	TOT ADJ PTS	EFF. BASE RATE	REPL. COST NEW	AYB	EYB	ECON	FNCT		NORM	% COND
0500	22	3,286	412.4484	587.74	1,931,314	2017	2017	0	0	0	2.00	98.00

2 SFR CUST – 0% - 2023 Heated Area: 2792 HX Base Yr

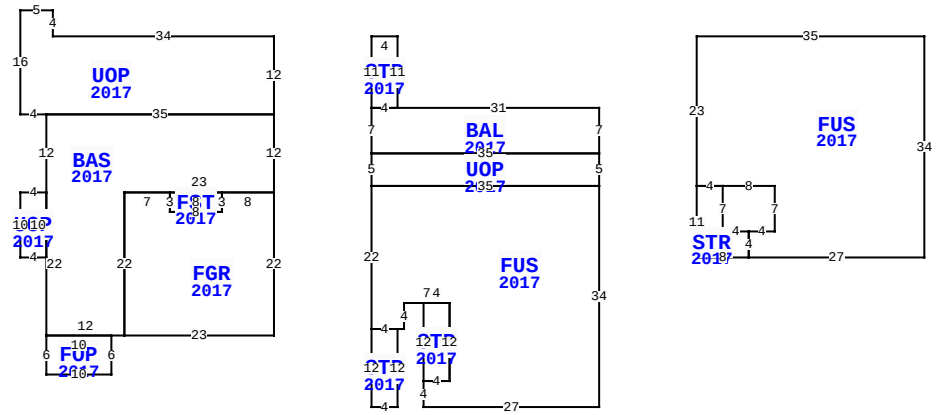

** This building has 14 Sub-Areas

1554 S FLETCHER AVE, FERNANDINA BEACH

BLD DATE		LGL DATE	
XF DATE		LAND DATE	
INC DATE		AG DATE	

VALUATION SUMMARY

VALUATION BY	STANDARD
Tax Group: 2	Tax Dist:
BUILDING MARKET VALUE	1,892,688
TOTAL MARKET OB/XF VALUE	23,782
TOTAL LAND VALUE - MARKET	900,000
TOTAL MARKET VALUE	2,816,470
SOH/AGL Deduction	0
ASSESSED VALUE	2,816,470
TOTAL EXEMPTION VALUE	0
BASE TAXABLE VALUE	2,816,470
TOTAL JUST VALUE	2,816,470
NCON VALUE	0
INCOME VALUE	
PREVIOUS YEAR MKT VALUE	1,984,028

PERMIT NUM	DESCRIPTION	AMT	ISSUED
20162319	CO ISSUED	0	03/29/2017
20162319	NEW CONSTR	325,356	08/22/2016
20160626	DEMO G/HSE	8,000	03/09/2016
20110109	REPLACE TREADS/CA	450	01/24/2011
20020752	VINYL SOFFIT/FASC	2,000	04/30/2002
20020570	REROOF W/30YR SHN	3,000	04/04/2002

SALES DATA

OFF RECORD Number	DATE	TYPE INST	Q / U	V / I	RSN CD	SALE PRICE
2596/1786	10/17/2022	WD	Q	I	01	3,900,000
GRANTOR: ROBERTS THOMAS H III						
GRANTEE: LALOLA RIVA LLC						
2019/0188	12/16/2015	WD	Q	I	01	1,000,000
GRANTOR: SMOAK STEVE C						
GRANTEE: ROBERTS THOMAS HUGH						

BUILDING NOTES

BUILDING DIMENSIONS

UOP=[YR=2017] W34 N4 W5 S16 E4 BAS=[YR=2017] S12 UOP=[YR=2017] W4 S10 E4 N10$ S22 FOP=[YR=2017] S6 E10 N6 W10 $ E12 FGR=[YR=2017] E23 N22 W8 FST=[YR=2017] W8 S3 E8 N3$ S3 W8 N3 W7 S22$ N22 E23 N12 W35$ E35 N12$ PTR=E15 STR=[YR=2017] E4 S11 BAL=[YR=2017] E31 S7 UOP=[YR=2017] S5 FUS=[YR=2017] S34 W27 N4 STR=[YR=2017] N12 E4 S12 W4$ E4 N12 W7 S4 W1 STR=[YR=2017] S12 W4 N12 E4$ W4 N22 E35$ W35 N5 E35$ W35 N7 E4$ W4 N11$ W15$ PTR=E65 FUS=[YR=2017] E35 S34 W27 N4 E4 N7 W8 STR=[YR=2017] S7 E4 S4 W8 N11 E4$ W4 N23$ W65$.

EXTRA FEATURES

LN	OB/XF CODE	DESCRIPTION	BLD	CAP	L	W	UNITS	UT	Adj R	ADJ UNIT PRICE	ORIG COND	YEAR ON	YEAR ACTUAL	Q	% COND	OB/XF MKT VALUE	NOTES
1	0855	CONC PAVER	0	0	0	0	1,466.00	SF	7.00	7.00	100	2017	2017	3	97	9,954	
2	0855	CONC PAVER	0	0	0	0	151.00	SF	7.00	7.00	100	2017	2017	3	97	1,025	
3	0462	ST/AL FNC	0	0	0	0	656.00	SF	10.00	10.00	100	2017	2017	3	87	5,707	
4	0855	CONC PAVER	0	0	0	0	66.00	SF	10.00	10.00	100	2017	2017	3	97	640	
5	0810	CONCRETE A	0	0	6	5	30.00	SF	6.50	6.50	100	2017	2017	3	97	189	
6	1127	BRICK 8"	0	0	0	0	10.00	SF	11.00	11.00	100	2017	2017	3	99	109	
7	0416	DUNEWALKS	0	0	65	4	248.00	SF	30.00	30.00	100	2011	2011	3	55	4,092	
8	0416	DUNEWALKS	0	0	0	0	84.00	SF	30.00	30.00	100	2017	2017	3	82	2,066	

LAND DESCRIPTION

TOTAL OB/XF 23,782

LN	USE CODE	CLS	LAND USE DESCRIPTION	CAP	RD	LOC ZONE	FRONT	DEPTH	TOT LND UTS	UNIT TYPE	DT	DPTH FACT	% COND	TOT ADJ	UNIT PRICE	ADJ UNIT PRICE	LAND VALUE	OTHER ADJUSTMENTS AND NOTES	YEAR	DENSITY	DECL	FRZ	YR	CONSRV
1	000120	C	SFR OCN FT	0	0006	R-1	60.00	150.00	60.00	FF		1.00	1.00	1.00	15,000.00	15,000.00	900,000							

REVIEW DATE 04/21/2017 BY DJ Total Acres: 0.00 Total Land Value: 900,000 Market: 0 Agricultural: 0 Common: 900,000 PRINTED 08/02/2023 BY SYS