LOT 32
LIGHTHOUSE CIRCLE REPLAT
PB 5/4

CRABTREE PHYLLIS L/E/
212 LIGHTHOUSE CIRCLE
FERNANDINA BEACH, FL 32034

2023

00-00-31-1440-0032-0000

NASSAU COUNTY PROPERTY

BUILDING CHARACTERISTICS

ELEMENT	CD	CONSTRUCTION
Exterior Wall	11	BD/BTN AVG 100
Roof Structur	03	GABLE/HIP 100
Roof Cover	03	COMP SHNGL 100
Interior Wall	05	DRYWALL 100
Interior Floo	11	CLAY TILE 100
Air Condition	03	CENTRAL 100
Heating Type	04	AIR DUCTED 100
Bedrooms		3 100
Bathrooms		3.5 100
Frame	02	WOOD FRAME 100
Stories	1.	1. 100
Units		0 100
BUD8 Adjustme	02	DIST FB 100
Occupancy	00	NONE 100
Quality	03	Quality Level 03
DOR CODE	0100	SINGLE FAMILY
MAP NUM		MKT AREA 01
NEIGHBORHOOD/LOC	1007.00	

AREA TYPE	TOTAL GROSS AREA	PCT OF BASE	TOT ADJ AREA	SUBAREA MARKET VALUE
BAS	1,976	100	1,976	238,217
BAS	88	100	88	10,609
FEP	483	80	386	46,535
FOP	76	30	23	2,773
FOP	33	30	10	1,206
FOP	150	30	45	5,425
FUS	855	100	855	103,075
STR	88	10	9	1,085
UOP	880	20	176	21,218
TOTALS	4,629		3,568	430,140

MARKET ADJUSTMENTS

TYPE	MDL	EFF. AREA	TOT ADJ PTS	EFF. BASE RATE	REPL. COST NEW	AYB	EYB	ECON	FNCT		NORM	% COND
0900	01	3,568	108.0000	128.25	457,596	1966	2010	0	0	0	6.00	94.00

1 SNGL FAM – 100% - 2022 Heated Area: 2919 HX Base Yr 2022

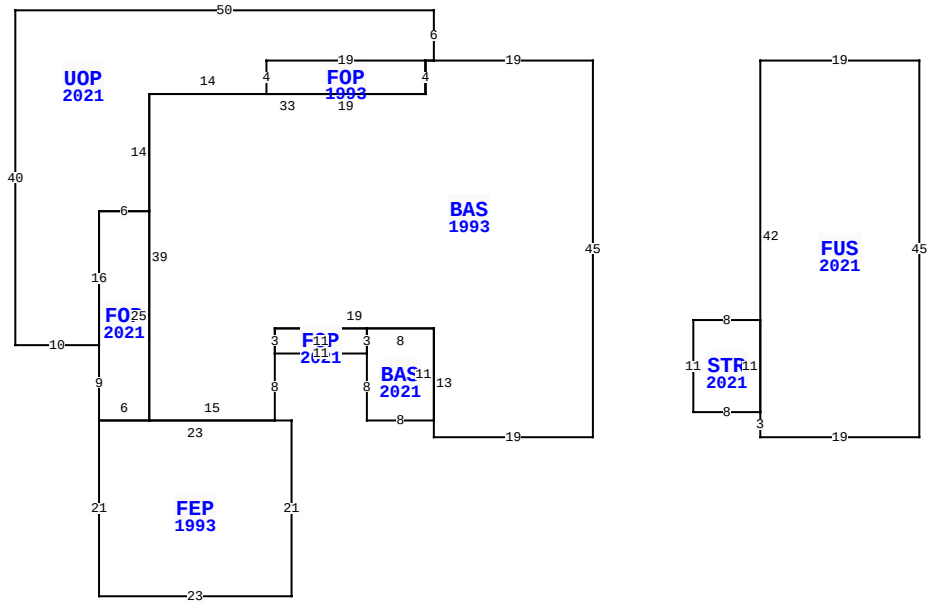

212 LIGHTHOUSE CIR, FERNANDINA BEACH

BLD DATE		LGL DATE	
XF DATE		LAND DATE	
INC DATE		AG DATE	

VALUATION SUMMARY

VALUATION BY		STANDARD
Tax Group: 2	Tax Dist:	
BUILDING MARKET VALUE		430,140
TOTAL MARKET OB/XF VALUE		3,471
TOTAL LAND VALUE - MARKET		275,000
TOTAL MARKET VALUE		708,611
SOH/AGL Deduction		295,165
ASSESSED VALUE		413,446
TOTAL EXEMPTION VALUE	HX HB WX	55,000
BASE TAXABLE VALUE		358,446
TOTAL JUST VALUE		708,611
NCON VALUE		0
INCOME VALUE		
PREVIOUS YEAR MKT VALUE		598,685

PERMIT NUM	DESCRIPTION	AMT	ISSUED
20222536	XFOB	9,202	10/20/2022
20200350	ADDITION	250,000	07/29/2020
20163305	KIT REM F	35,000	12/05/2016
20111172	REPAIR/RRF	2,000	07/19/2011
20101918	H/AC	6,000	11/04/2010
2004398	REPAIR/RRF	3,000	11/21/2000

SALES DATA

OFF RECORD Number	DATE	TYPE INST	Q U	V I	RSN CD	SALE PRICE
2535/0339	1/10/2022	WD	U	I	11	100
GRANTOR: CRABTREE PHYLLIS						
GRANTEE: CRABTREE PHYLLIS L/						
2519/1845	11/17/2021	WD	U	I	11	100
GRANTOR: FULLER DAVID MARK						
GRANTEE: CRABTREE PHYLLIS						

BUILDING NOTES

BUILDING DIMENSIONS

BAS=[YR=1993] W19 UOP=[YR=2021] N6 W50 S40 E10 FOP=[YR=2021] S9 FEP=[YR=1993] S21 E23N21 W23$E6N25W6S16$ N16 E6 N14 E14 FOP=[YR=1993] N4 E19 S4 W19$ E19N4 E1$ W1 S4 W33 S39 E15N8 FOP=[YR=2021] E11 BAS=[YR=2021] S8 E8 N11 W8 S3$ N3 W11 S3$N3 E19 S13 E19 N45$ PTR=E20 FUS=[YR=2021] E19 S45 W19 N3 STR=[YR=2021] W8 N11 E8 S11$ N42$ W20$.

EXTRA FEATURES

LN	OB/XF CODE	DESCRIPTION	BLD	CAP	L	W	UNITS	UT	Adj R	ADJ UNIT PRICE	ORIG COND	YEAR ON	YEAR ACTUAL	Q	% COND	OB/XF MKT VALUE	NOTES
1	0504	FP-ELECTRI	0	100	0	0	1.00	UT	2,000.00	2,000.00	100	2021	2021	3	100	2,000	
2	0810	CONCRETE A	0	100	0	0	376.00	SF	6.50	6.50	100	1966	1966	3	20	489	
3	0940	SHEDS/PORT	0	100	8	12	96.00	SF	33.00	33.00	100	2006	2006	3	31	982	

LAND DESCRIPTION

TOTAL OB/XF 3,471

LN	USE CODE	CLS	LAND USE DESCRIPTION	CAP	RD	LOC ZONE	FRONT	DEPTH	TOT LND UTS	UNIT TYPE	DT	DPTH FACT	% COND	TOT ADJ	UNIT PRICE	ADJ UNIT PRICE	LAND VALUE	OTHER ADJUSTMENTS AND NOTES	YEAR	DENSITY	DECL	FRZ	YR	CONSRV
1	000100	C	SFR	100	0006	R-1	124.00	140.00	1.00	LT		1.00	1.00	1.00	275,000.00	275,000.00	275,000							

REVIEW DATE 12/06/2021 BY DJ Total Acres: 0.00 Total Land Value: 275,000 Market: 0 Agricultural: 0 Common: 275,000 PRINTED 08/02/2023 BY SYS