LOT 10
IN OR 1561/1801
LIGHTHOUSE CIRCLE SUB

THOMAS MICHAEL RAY
219 LIGHTHOUSE CR
FERNANDINA BEACH, FL 32034

2023

00-00-31-1420-0010-0000

BUILDING CHARACTERISTICS

ELEMENT	CD	CONSTRUCTION
Exterior Wall	10	ABOVE AVG 100
Roof Structur	03	GABLE/HIP 100
Roof Cover	03	COMP SHNGL 100
Interior Wall	05	DRYWALL 100
Interior Floo	11	CLAY TILE 50
Interior Floo	12	HARDWOOD 50
Air Condition	03	CENTRAL 100
Heating Type	04	AIR DUCTED 100
Bedrooms		3 100
Bathrooms		3 100
Frame	03	MASONRY 100
Stories	1.5	1.5 100
Units		0 100
BUD8 Adjustme	02	DIST FB 100
Occupancy	00	NONE 100
Quality	04	Quality Level 04

DOR CODE	0100	SINGLE FAMILY	
MAP NUM		MKT AREA	01
NEIGHBORHOOD/LOC	1007.00		

AREA TYPE	TOTAL GROSS AREA	PCT OF BASE	TOT ADJ AREA	SUBAREA MARKET VALUE
BAS	1,039	100	1,039	132,198
BAS	736	100	736	93,646
DCK	303	10	30	3,817
FGR	475	55	261	33,208
FOP	50	30	15	1,909
FOP	506	30	152	19,340
FUS	750	100	750	95,427
STP	10	10	1	127
TOTALS	3,869		2,984	379,672

MARKET ADJUSTMENTS

TYPE	MDL	EFF. AREA	TOT ADJ PTS	EFF. BASE RATE	REPL. COST NEW	AYB	EYB	ECON	FNCT		NORM	% COND
0900	01	2,984	116.4660	138.30	412,687	1961	2005	0	0	0	8.00	92.00

1 SNGL FAM – 100% - 2009 Heated Area: 2525 HX Base Yr 2009

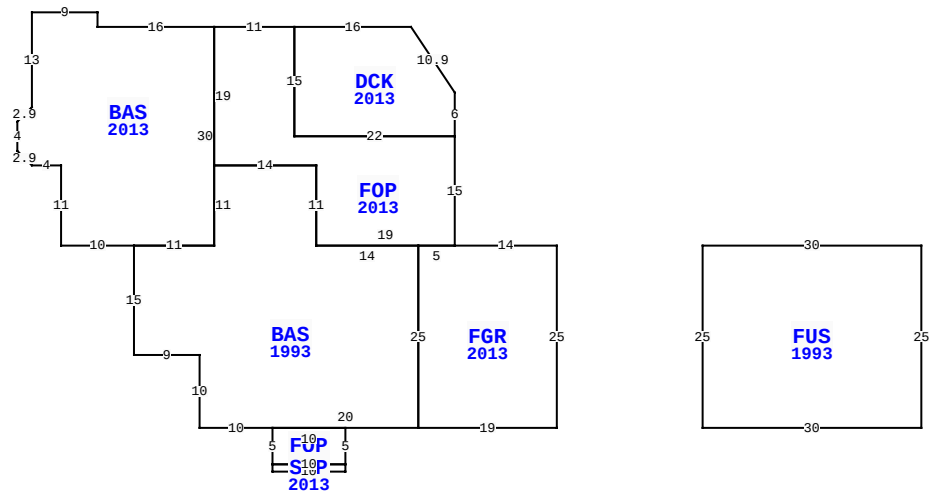

219 LIGHTHOUSE CIR, FERNANDINA BEACH

BLD DATE		LGL DATE	
XF DATE		LAND DATE	
INC DATE		AG DATE	

NASSAU COUNTY PROPERTY

PAGE 1 of 1 2

VALUATION SUMMARY

VALUATION BY		STANDARD
Tax Group: 2	Tax Dist:	
BUILDING MARKET VALUE		379,672
TOTAL MARKET OB/XF VALUE		22,139
TOTAL LAND VALUE - MARKET		275,000
TOTAL MARKET VALUE		676,811
SOH/AGL Deduction		447,334
ASSESSED VALUE		229,477
TOTAL EXEMPTION VALUE	HX HB	50,000
BASE TAXABLE VALUE		179,477
TOTAL JUST VALUE		676,811
NCON VALUE		0
INCOME VALUE		
PREVIOUS YEAR MKT VALUE		584,910

PERMIT NUM	DESCRIPTION	AMT	ISSUED
20132712	ALUMFNC	0	12/02/2013
20131551	PAVERS	0	07/03/2013
20121888	FIXTURES FOR ADDI	7,000	09/12/2012
20121441	ADDITION	186,000	07/18/2012
20121442	ROOF FOR ADDITION	8,000	07/18/2012
20112121	REWIRE & ADDITION	600	11/23/2011

SALES DATA

OFF RECORD Number	DATE	TYPE INST	Q U	V I	RSN CD	SALE PRICE
1561/1801	4/17/2008	WD	Q	I		242,500
GRANTOR: SNEDAKER REES A						
GRANTEE: THOMAS MICHAEL RAY						
0317/0740	7/01/1980	WD	Q	I		58,000
GRANTOR:						
GRANTEE:						

BUILDING NOTES

BUILDING DIMENSIONS

FGR=[YR=2013] W14 FOP=[YR=2013] N15 DCK=[YR=2013] N6 U9 L6 W16 S15 E22$ W22 N15 W11 BAS=[YR=2013] W16 N2 W9 S13 D2 L2 S4 D2 R2 E4 S11 E10 BAS=[YR=1993] S15 E9 S10 E10 FOP=[YR=2013] S5 STP=[YR=2013] S1 E10 N1 W10$ E10 N5 W10$ E20 N25 W14 N11 W14 S11 W11$ E11 N30$ S19 E14 S11 E19$ W5 S25 E19 N25$ PTR=E20 FUS=[YR=1993] E30 S25 W30 N25$ W20$.

EXTRA FEATURES

LN	OB/XF CODE	DESCRIPTION	BLD	CAP	L	W	UNITS	UT	Adj R	ADJ UNIT PRICE	ORIG COND	YEAR ON	YEAR ACTUAL	Q	% COND	OB/XF MKT VALUE	NOTES
1	0855	CONC PAVER	0	100	0	0	779.00	SF	7.00	7.00	100	2013	2013	3	95	5,180	
2	0855	CONC PAVER	0	100	0	0	1,435.00	SF	7.00	7.00	100	2013	2013	3	95	9,543	
6	0462	ST/AL FNC	0	100	0	0	240.00	SF	10.00	10.00	100	2013	2013	3	75	1,800	
7	0940	SHEDS/PORT	0	100	24	12	288.00	SF	30.00	30.00	100	2013	2013	3	65	5,616	

LAND DESCRIPTION

TOTAL OB/XF 22,139

LN	USE CODE	CLS	LAND USE DESCRIPTION	CAP	RD	LOC ZONE	FRONT	DEPTH	TOT LND UTS	UNIT TYPE	DT	DPTH FACT	% COND	TOT ADJ	UNIT PRICE	ADJ UNIT PRICE	LAND VALUE	OTHER ADJUSTMENTS AND NOTES	YEAR	DENSITY	DECL	FRZ	YR	CONSRV
1	000100	C	SFR	100	0006	R-1	100.00	180.00	1.00	LT		1.00	1.00	1.00	275,000.00	275,000.00	275,000							

REVIEW DATE 08/28/2019 BY DJA Total Acres: 0.00 Total Land Value: 275,000 Market: 0 Agricultural: 0 Common: 275,000 PRINTED 08/02/2023 BY SYS