BLK 8A PT OF LOT 2
IN OR 2029/458
INTERLACHEN-BY-THE-SEA-REPLAT

WEIGEL NOEL & TAMMY
125 CREEKVIEW CIRCLE
DUBLIN, GA 31021

2023

00-00-31-1401-008A-0020

BUILDING CHARACTERISTICS

ELEMENT	CD	CONSTRUCTION
Exterior Wall	05	AVERAGE 100
Roof Structur	03	GABLE/HIP 100
Roof Cover	03	COMP SHNGL 100
Interior Wall	05	DRYWALL 100
Interior Floo	12	HARDWOOD 70
Interior Floo	11	CLAY TILE 30
Air Condition	03	CENTRAL 100
Heating Type	04	AIR DUCTED 100
Bedrooms		4 100
Bathrooms		4 100
Frame	02	WOOD FRAME 100
Stories	1.5	1.5 100
Units		0 100
BUD8 Adjustme	02	DIST FB 100
Occupancy	00	NONE 100
Quality	03	Quality Level 03
DOR CODE	0800	MULTI-FAMILY
MAP NUM		MKT AREA 01
NEIGHBORHOOD/LOC	1050.00	

AREA TYPE	TOTAL GROSS AREA	PCT OF BASE	TOT ADJ AREA	SUBAREA MARKET VALUE
APT	1,752	100	1,752	184,982
FOP	12	30	4	422
HXB	66	100	66	6,969
HXB	1,716	100	1,716	181,181
HXB	60	100	60	6,335
HXG	650	55	358	37,799
PTO	224	5	11	1,162
TOTALS	4,480		3,967	418,850

MARKET ADJUSTMENTS

TYPE	MDL	EFF. AREA	TOT ADJ PTS	EFF. BASE RATE	REPL. COST NEW	AYB	EYB	ECON	FNCT		NORM	% COND
2700	01	3,967	102.0600	121.71	482,824	1973	1995	0	0	0	13.25	86.75

1 DUPLEX – 0% - 0 Heated Area: 3594 HX Base Yr

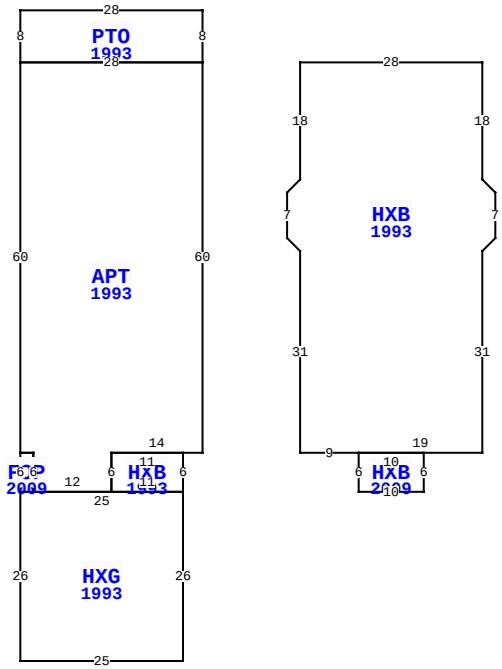

BLD DATE	07/15/2014	KK	LGL DATE
XF DATE			LAND DATE
INC DATE			AG DATE

1660 N FLETCHER AVE, FERNANDINA BEACH

NASSAU COUNTY PROPERTY

PAGE 1 of 1 2

VALUATION SUMMARY

VALUATION BY	STANDARD
Tax Group: 2	Tax Dist:
BUILDING MARKET VALUE	418,850
TOTAL MARKET OB/XF VALUE	24,834
TOTAL LAND VALUE - MARKET	800,000
TOTAL MARKET VALUE	1,243,684
SOH/AGL Deduction	224,149
ASSESSED VALUE	1,019,535
TOTAL EXEMPTION VALUE	0
BASE TAXABLE VALUE	1,019,535
TOTAL JUST VALUE	1,243,684
NCON VALUE	0
INCOME VALUE	
PREVIOUS YEAR MKT VALUE	1,112,298

PERMIT NUM	DESCRIPTION	AMT	ISSUED
20090764	REPAIR/RRF	1,285	06/16/2009
20090684	ELEC OTHER	600	06/02/2009
20090263	XFOB	28,000	02/27/2009
2002217	REPAIR/RRF	1,500	02/17/2000
19984406	XFOB	3,500	10/15/1998
9449	REMODEL	148,000	11/22/1995

SALES DATA

OFF RECORD Number	DATE	TYPE INST	Q U	V I	RSN CD	SALE PRICE
2029/0458	2/16/2016	WD	Q	I	01	950,000
GRANTOR: BAGLEY CHARLES MD & C						
GRANTEE: WEIGEL NOEL & TAMMY						
2029/0456	2/12/2016	WD	U	I	11	100
GRANTOR: BAGLEY CHARLES E MD P						
GRANTEE: BAGLEY CHARLES E MD						

BUILDING NOTES

BUILDING DIMENSIONS

PTO=[YR=1993] W28 S8 APT=[YR=1993] S60 FOP=[YR=2009] S6 HXG=[YR=1993] S26 E25 N26 HXB=[YR=1993] N6 W11 S6 E11 $ W25 $ E2 N6 W2 $ E2 S6 E12 N6 E14 N60 W28 $ E28 N8 $ PTR= E15 S8 HXB=[YR=1993] S18 D2 L2 S7 D2 R2 S31E9HXB=[YR=2009] S6E10N6W10$ E19 N31 U2 R2 N7 U2 L2 N18W28$ N8W15$.

EXTRA FEATURES

LN	OB/XF CODE	DESCRIPTION	BLD	CAP	L	W	UNITS	UT	Adj R	ADJ UNIT PRICE	ORIG COND	YEAR ON	YEAR ACTUAL	Q	% COND	OB/XF MKT VALUE	NOTES
1	0810	CONCRETE A	0	0	35	4	140.00	SF	6.50	6.50	100	1973	1973	3	25	228	
2	1241	WD DECK G	0	0	0	0	340.00	UT	17.25	17.25	100	2009	2009	3	60	3,519	
3	0810	CONCRETE A	0	0	72	16	1,152.00	SF	6.50	6.50	100	1998	1998	3	77	5,766	
4	0416	DUNEWALKS	0	0	4	93	372.00	SF	15.00	15.00	100	2009	2009	3	45	2,511	
5	1242	WD DECK A	0	0	3	10	30.00	SF	10.00	10.00	100	1998	1998	3	20	60	
6	0409	ELEVATOR R	0	0	0	0	1.00	UT	12,750.00	12,750.00	100	2009	2009	3	100	12,750	

LAND DESCRIPTION

TOTAL OB/XF 24,834

LN	USE CODE	CLS	LAND USE DESCRIPTION	CAP	RD	LOC ZONE	FRONT	DEPTH	TOT LND UTS	UNIT TYPE	DT	DPTH FACT	% COND	TOT ADJ	UNIT PRICE	ADJ UNIT PRICE	LAND VALUE	OTHER ADJUSTMENTS AND NOTES	YEAR	DENSITY	DECL	FRZ	YR	CONSRV
1	000800	C	MULTI-FAM	0	0006	R-1	50.00	235.00	50.00	FF		1.00	1.00	1.00	16,000.00	16,000.00	800,000							

REVIEW DATE 01/14/2021 BY TWA Total Acres: 0.00 Total Land Value: 800,000 Market: 0 Agricultural: 0 Common: 800,000 PRINTED 08/02/2023 BY SYS