BLOCK 7 S1/2 OF LOT 2
BEING PARCEL"1"PT OR 2435/1389
INTERLACHEN-BY-THE-SEA PB 5/21

SMITH JAMES R & ELIZABETH E
1525 N FLETCHER AVE
FERNANDINA BEACH, FL 32034

2023

00-00-31-1400-0007-0022

BUILDING CHARACTERISTICS

ELEMENT	CD	CONSTRUCTION
Exterior Wall	14	WD SHINGLE 100
Roof Structur	03	GABLE/HIP 100
Roof Cover	03	COMP SHNGL 100
Interior Wall	05	DRYWALL 70
Interior Wall	06	CUST PANEL 30
Interior Floo	14	CARPET 60
Interior Floo	12	HARDWOOD 40
Air Condition	03	CENTRAL 100
Heating Type	04	AIR DUCTED 100
Bedrooms		3 100
Bathrooms		2.5 100
Frame	07	SPECIAL 100
Stories	3.	3. 100
Units		0 100
Quality	03	Quality Level 03
DOR CODE	0100	SINGLE FAMILY
MAP NUM		MKT AREA 01
NEIGHBORHOOD/LOC	1056.00	

AREA TYPE	TOTAL GROSS AREA	PCT OF BASE	TOT ADJ AREA	SUBAREA MARKET VALUE
BAS	100	100	100	22,376
DCK	180	10	18	4,028
FAT	105	20	21	4,699
FAT	105	20	21	4,699
FAT	112	20	22	4,922
FAT	112	20	22	4,922
FGR	1,004	55	552	123,518
FOP	100	30	30	6,713
FOP	260	30	78	17,454
FSP	180	40	72	16,111
TOTALS	6,680		4,601	1,029,539

MARKET ADJUSTMENTS

TYPE	MDL	EFF. AREA	TOT ADJ PTS	EFF. BASE RATE	REPL. COST NEW	AYB	EYB	ECON	FNCT		NORM	% COND
0500	12	4,601	162.7206	231.88	1,066,880	2008	2015	0	0	0	3.50	96.50

1 SFR CUST – 100% - 2022 Heated Area: 3352 HX Base Yr 2022

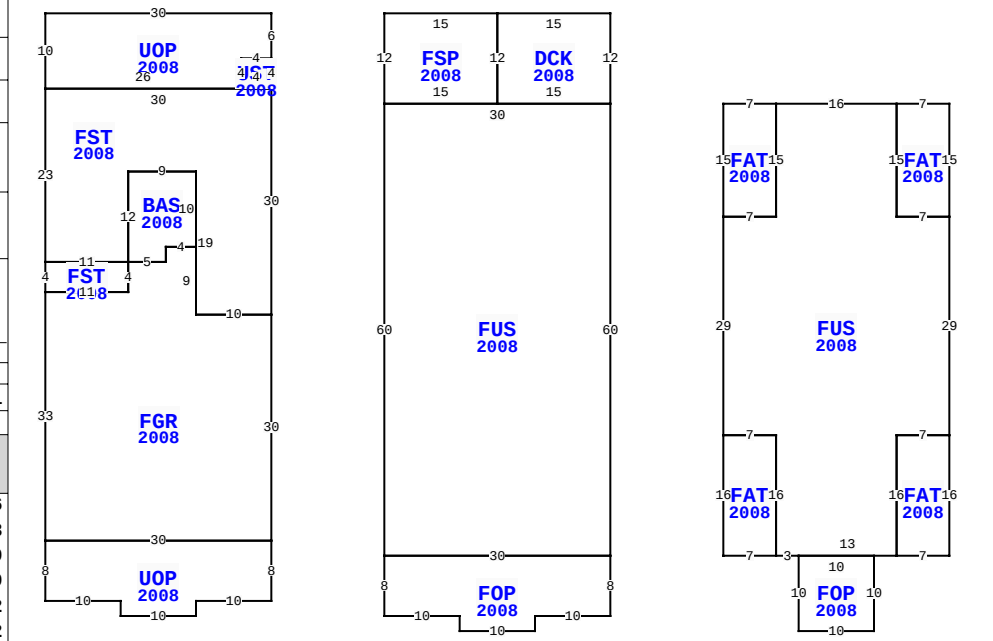

** This building has 17 Sub-Areas

BLD DATE	07/15/2014	KK	LGL DATE
XF DATE			LAND DATE
INC DATE			AG DATE

1525 N FLETCHER AVE, FERNANDINA BEACH

NASSAU COUNTY PROPERTY

PAGE 1 of 2 2

VALUATION SUMMARY

VALUATION BY		STANDARD
Tax Group: 2	Tax Dist:	
BUILDING MARKET VALUE		1,046,971
TOTAL MARKET OB/XF VALUE		99,399
TOTAL LAND VALUE - MARKET		450,000
TOTAL MARKET VALUE		1,596,370
SOH/AGL Deduction		167,678
ASSESSED VALUE		1,428,692
TOTAL EXEMPTION VALUE	HX HB	50,000
BASE TAXABLE VALUE		1,378,692
TOTAL JUST VALUE		1,596,370
NCON VALUE		0
INCOME VALUE		
PREVIOUS YEAR MKT VALUE		1,387,080

PERMIT NUM	DESCRIPTION	AMT	ISSUED
20152152	CABANA	0	09/16/2015
20152068	SWIM POOL	44,000	09/04/2015
20080320	XFOB	6,130	03/03/2008
20080184	OTHER	800	02/08/2008
20072107	GAS	1,000	11/26/2007
20072052	NEW CONSTR	19,000	11/06/2007

SALES DATA

OFF RECORD Number	DATE	TYPE INST	Q / U	V / I	RSN CD	SALE PRICE
2435/1389	2/18/2021	WD	Q	I	05	1,780,000
GRANTOR: KOSTICH THEODORE K &						
GRANTEE: SMITH JAMES R & ELI						
2099/0851	2/01/2017	WD	U	I	11	100
GRANTOR: KOSTICH THEODORE K &						
GRANTEE: KOSTICH THEODORE K						

BUILDING NOTES

EXTRA FEATURES

LN	OB/XF CODE	DESCRIPTION	BLD	CAP	L	W	UNITS	UT	Adj R	ADJ UNIT PRICE	ORIG COND	YEAR ON	YEAR ACTUAL	Q	% COND	OB/XF MKT VALUE	NOTES
1	0409	ELEVATOR R	0	100	0	0	1.00	UT	10,200.00	10,200.00	100	2008	2008	3	100	10,200	
2	1100	VAC SYSTEM	0	100	0	0	1.00	UT	1,320.00	1,320.00	100	2008	2008	3	40	528	
4	0877	JACUZZI	0	100	0	0	1.00	UT	1,000.00	1,000.00	100	2008	2008	3	40	400	
5	0855	CONC PAVER	0	100	72	3	216.00	SF	10.00	10.00	100	2008	2008	3	90	1,944	
6	0855	CONC PAVER	0	100	0	0	1,430.00	SF	10.00	10.00	100	2008	2008	3	90	12,870	
7	0476	VF 6 SBPL	0	100	0	0	178.00	LF	32.00	32.00	100	2008	2008	3	76	4,329	
8	0855	CONC PAVER	0	100	16	6	96.00	SF	10.00	10.00	100	2008	2008	3	90	864	
9	0861	POOL GUNIT	0	100	0	0	440.00	SF	170.00	170.00	100	2016	2016	3	84	62,832	
10	0855	CONC PAVER	0	100	0	0	560.00	SF	10.00	10.00	100	2016	2016	3	97	5,432	

BUILDING DIMENSIONS

DCK=[YR=2008] W15 FSP=[YR=2008] W15 S12 FUS=[YR=2008] S60
FOP=[YR=2008] S8E10S2E10 N2E10N8W30$ E30N60W30$ E15N12$
S12E15N12$ PTR=W45 UOP=[YR=2008] W30 S10 FST=[YR=2008] S23
FST=[YR=2008] S4 FGR=[YR=2008] S33 UOP=[YR=2008] S8E10S2
E10N2E10N8W30$E30N30W10N9W4S2 W5S4W11$ E11N4W11$ E11
BAS=[YR=2008] E5N2E4N10W9S12$ N12E9 S19E10N30W30$E26
UST=[YR=2008] E4N4 W4S4$ N4E4N6$ E45$ PTR= S12E15
FAT=[YR=2008] S15 FUS=[YR=2008] S29 FAT=[YR=2008] S16
E7N16W7$ E7S16 E3 FOP=[YR=2008] S10E10N10W10$ E13
FAT=[YR=2008] E7N16W7S16$ N16E7N29 FAT=[YR=2008] N15W7S15E7$
W7N15W16 S15W7$E7N15W7$ W15N12$.

LAND DESCRIPTION

TOTAL OB/XF 99,399

LN	USE CODE	CLS	LAND USE DESCRIPTION	CAP	RD	LOC ZONE	FRONT	DEPTH	TOT LND UTS	UNIT TYPE	DT	DPTH FACT	% COND	TOT ADJ	UNIT PRICE	ADJ UNIT PRICE	LAND VALUE	OTHER ADJUSTMENTS AND NOTES	YEAR	DENSITY	DECL	FRZ	YR	CONSRV
1	000100	C	SFR	100	0006		50.00	150.00	50.00	FF		1.00	1.00	1.00	9,000.00	9,000.00	450,000							

REVIEW DATE 01/14/2021 BY TWA Total Acres: 0.00 Total Land Value: 450,000 Market: 0 Agricultural: 0 Common: 450,000 PRINTED 08/02/2023 BY SYS

BLOCK 7 S1/2 OF LOT 2
BEING PARCEL"1"PT OR 2435/1389
INTERLACHEN-BY-THE-SEA PB 5/21

SMITH JAMES R & ELIZABETH E
1525 N FLETCHER AVE
FERNANDINA BEACH, FL 32034

2023

00-00-31-1400-0007-0022

BUILDING CHARACTERISTICS

ELEMENT	CD	CONSTRUCTION
Exterior Wall	10	ABOVE AVG 100
Roof Structur	03	GABLE/HIP 100
Roof Cover	03	COMP SHNGL 100
Interior Wall	05	DRYWALL 100
Interior Floo	11	CLAY TILE 100
Air Condition	03	CENTRAL 100
Heating Type	04	AIR DUCTED 100
Bedrooms		0 100
Bathrooms		1 100
Frame	02	WOOD FRAME 100
Stories	1.	1. 100
Units		0 100
Occupancy	00	NONE 100
Quality	03	Quality Level 03

DOR CODE 0100 SINGLE FAMILY
MAP NUM | MKT AREA 01
NEIGHBORHOOD/LOC 1056.00

AREA TYPE	TOTAL GROSS AREA	PCT OF BASE	TOT ADJ AREA	SUBAREA MARKET VALUE
BAS	240	100	240	16,216
FOP	60	30	18	1,216
TOTALS	300		258	17,432

MARKET ADJUSTMENTS

TYPE	MDL	EFF. AREA	TOT ADJ PTS	EFF. BASE RATE	REPL. COST NEW	AYB	EYB	ECON	FNCT		NORM	% COND
0150	01	258	138.6000	69.30	17,879	2016	2016	0	0	0	2.50	97.50

2 ACCESORY U – 100% - 2022 Heated Area: 240 HX Base Yr 2022

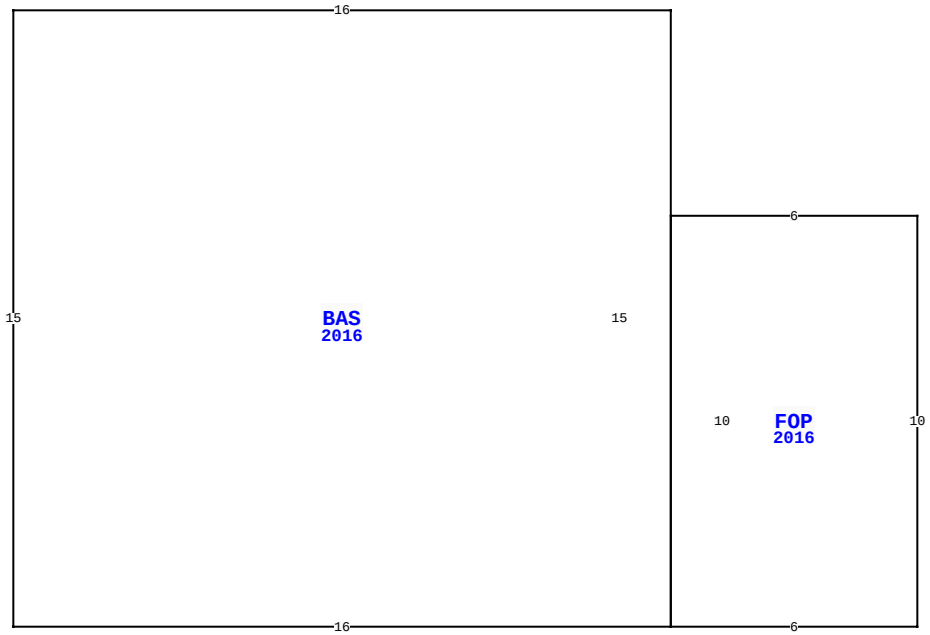

1525 N FLETCHER AVE, FERNANDINA BEACH

BLD DATE	07/15/2014	KK	LGL DATE
XF DATE			LAND DATE
INC DATE			AG DATE

NASSAU COUNTY PROPERTY

PAGE 2 of 2 2

VALUATION SUMMARY

VALUATION BY		STANDARD
Tax Group: 2	Tax Dist:	
BUILDING MARKET VALUE		1,046,971
TOTAL MARKET OB/XF VALUE		99,399
TOTAL LAND VALUE - MARKET		450,000
TOTAL MARKET VALUE		1,596,370
SOH/AGL Deduction		167,678
ASSESSED VALUE		1,428,692
TOTAL EXEMPTION VALUE	HX HB	50,000
BASE TAXABLE VALUE		1,378,692
TOTAL JUST VALUE		1,596,370
NCON VALUE		0
INCOME VALUE		
PREVIOUS YEAR MKT VALUE		1,387,080

PERMIT NUM	DESCRIPTION	AMT	ISSUED
20072022	GAS	400	10/29/2007
20071698	NEW CONSTR	7,850	09/07/2007
20070958	DEMOLITION	3,265	05/31/2007
20033996	REMODEL	1,000	10/13/2003
20021011	REMODEL	1,000	06/14/2002

SALES DATA

OFF RECORD Number	DATE	TYPE INST	Q U	V I	RSN CD	SALE PRICE
2435/1389	2/18/2021	WD	Q	I	05	1,780,000
GRANTOR: KOSTICH THEODORE K &						
GRANTEE: SMITH JAMES R & ELI						
2099/0851	2/01/2017	WD	U	I	11	100
GRANTOR: KOSTICH THEODORE K &						
GRANTEE: KOSTICH THEODORE K						

BUILDING NOTES

BUILDING DIMENSIONS

BAS=[YR=2016] W16 S15 E16 FOP=[YR=2016] E6 N10 W6 S10$ N15$.

EXTRA FEATURES

L N	OB/XF CODE	DESCRIPTION	BLD	CAP	L	W	UNITS	UT	Adj R	ADJ UNIT PRICE	ORIG COND	YEAR ON	YEAR ACTUAL	Q	% COND	OB/XF MKT VALUE	NOTES

LAND DESCRIPTION

TOTAL OB/XF 0

L N	USE CODE	CLS	LAND USE DESCRIPTION	CAP	R D	LOC ZONE	FRONT	DEPTH	TOT LND UTS	UNIT TYPE	D T	DPTH FACT	% COND	TOT ADJ	UNIT PRICE	ADJ UNIT PRICE	LAND VALUE	OTHER ADJUSTMENTS AND NOTES	YEAR	DENSITY	DECL	FRZ	YR	CONSRV

REVIEW DATE 01/14/2021 BY TWA Total Acres: 0.00 Total Land Value: 450,000 Market: 0 Agricultural: 0 Common: 450,000 PRINTED 08/02/2023 BY SYS