BLOCK 7 N1/2 OF LOT 2
INTERLACHEN BY THE SEA PB 5/21

1529 FLETCHER LLC
3529 ENTERPRISE WAY
GREEN COVE SPRINGS, FL 32043

2023

00-00-31-1400-0007-0021

BUILDING CHARACTERISTICS

ELEMENT	CD	CONSTRUCTION
Exterior Wall	05	AVERAGE 60
Exterior Wall	16	WD FR STUC 40
Roof Structur	03	GABLE/HIP 100
Roof Cover	03	COMP SHNGL 100
Interior Wall	04	PLYWOOD 100
Interior Floo	08	SHT VINYL 70
Interior Floo	14	CARPET 30
Air Condition	03	CENTRAL 100
Heating Type	04	AIR DUCTED 100
Bedrooms		3 100
Bathrooms		2 100
Frame	07	SPECIAL 100
Stories	2.	2. 100
Units		0 100
BUD8 Adjustme	02	DIST FB 100
Occupancy	00	NONE 100
Quality	04	Quality Level 04

DOR CODE	0100	SINGLE FAMILY	
MAP NUM		MKT AREA	01
NEIGHBORHOOD/LOC	1056.00		

AREA TYPE	TOTAL GROSS AREA	PCT OF BASE	TOT ADJ AREA	SUBAREA MARKET VALUE
BAS	1,035	100	1,035	125,467
DCX	40	15	6	727
DCX	63	15	9	1,091
FOP	36	30	11	1,334
FOP	85	30	26	3,151
FOP	176	30	53	6,425
FSP	238	40	95	11,517
FST	54	55	30	3,637
FST	216	55	119	14,425
STR	50	10	5	607
TOTALS	2,745		1,683	204,019

MARKET ADJUSTMENTS

TYPE	MDL	EFF. AREA	TOT ADJ PTS	EFF. BASE RATE	REPL. COST NEW	AYB	EYB	ECON	FNCT		NORM	% COND
0900	01	1,683	117.8100	139.90	235,452	1972	1995	0	0	0	13.35	86.65

1 SNGL FAM – 0% - 2023 Heated Area: 1035 HX Base Yr

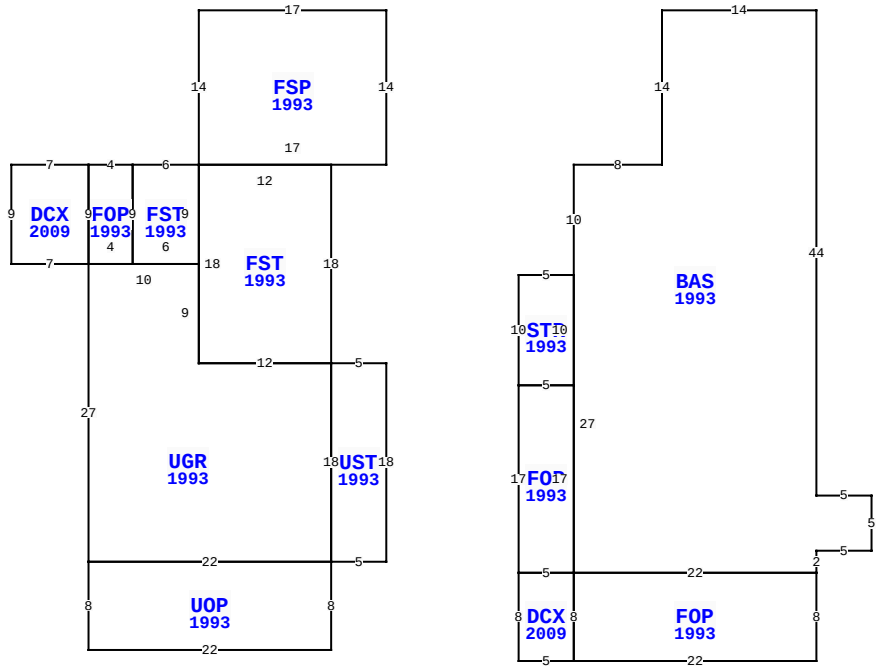

** This building has 13 Sub-Areas

1529 N FLETCHER AVE, FERNANDINA BEACH

BLD DATE	03/25/2015 KK	LGL DATE	
XF DATE		LAND DATE	
INC DATE		AG DATE	

NASSAU COUNTY PROPERTY

PAGE 1 of 1 2

VALUATION SUMMARY

VALUATION BY	STANDARD
Tax Group: 2	Tax Dist:
BUILDING MARKET VALUE	204,019
TOTAL MARKET OB/XF VALUE	14,012
TOTAL LAND VALUE - MARKET	450,000
TOTAL MARKET VALUE	668,031
SOH/AGL Deduction	0
ASSESSED VALUE	668,031
TOTAL EXEMPTION VALUE	0
BASE TAXABLE VALUE	668,031
TOTAL JUST VALUE	668,031
NCON VALUE	0
INCOME VALUE	
PREVIOUS YEAR MKT VALUE	540,516

PERMIT NUM	DESCRIPTION	AMT	ISSUED
20120314	H/AC	4,000	02/28/2012
20091763	REMODEL	17,600	12/28/2009
20041994	REPAIR/RRF	3,000	10/29/2004
5842B	REPAIR/RRF	7,000	02/16/1990

SALES DATA

OFF RECORD Number	DATE	TYPE INST	Q U /	V I /	RSN CD	SALE PRICE
2611/0149	12/27/2022	SW	U	I	11	100
GRANTOR: GAW EDWARD R JR						
GRANTEE: 1529 FLETCHER LLC						
1572/1795	6/20/2008	QC	U	I	06	100
GRANTOR: MCCARL LISA P						
GRANTEE: GAW EDWARD R JR						

BUILDING NOTES

BUILDING DIMENSIONS

FSP=[YR=1993] W17S14 FST=[YR=1993] W6 FOP=[YR=1993] W4
DCX=[YR=2009] W7S9E7N9$S9 UGR=[YR=1993] S27 UOP=[YR=1993]
S8E22N8W22 $ E22UST=[YR=1993] E5N18W5S18$ N18 FST=[YR=1993]
N18W12S18E12$ W12N9W10 $E4N9$S9E6N9$E17N14$ PTR=E25
BAS=[YR=1993] S14W8S10 STR=[YR=1993] W5S10 FOP=[YR=1993] S17
DCX=[YR=2009] S8E5 FOP=[YR=1993] E22N8W22S8$N8W5$E5N17
W5$E5N10$ S27E22N2E5N5W5N44W14 $ W25$.

EXTRA FEATURES

LN	OB/XF CODE	DESCRIPTION	BLD	CAP	L	W	UNITS	UT	Adj R	ADJ UNIT PRICE	ORIG COND	YEAR ON	YEAR ACTUAL	Q	% COND	OB/XF MKT VALUE	NOTES
1	0810	CONCRETE A	0	0	55	22	1,210.00	SF	6.50	6.50	100	1975	1975	3	27	2,124	
2	0410	ELEVATOR	0	0	0	0	1.00	UT	10,000.00	10,000.00	100	1978	1978	3	100	10,000	
3	1076	TRELLIS A	0	0	15	15	225.00	SF	7.50	7.50	100	1990	1990	3	20	338	
4	0462	ST/AL FNC	0	0	0	0	228.00	SF	10.00	10.00	100	2011	2011	3	68	1,550	

LAND DESCRIPTION

TOTAL OB/XF 14,012

LN	USE CODE	CLS	LAND USE DESCRIPTION	CAP	RD	LOC ZONE	FRONT	DEPTH	TOT LND UTS	UNIT TYPE	DT	DPTH FACT	% COND	TOT ADJ	UNIT PRICE	ADJ UNIT PRICE	LAND VALUE	OTHER ADJUSTMENTS AND NOTES	YEAR	DENSITY	DECL	FRZ	YR	CONSRV
1	000100	C	SFR	0	0006	R-1	50.00	150.00	50.00	FF		1.00	1.00	1.00	9,000.00	9,000.00	450,000							

REVIEW DATE 01/14/2021 BY TWA Total Acres: 0.00 Total Land Value: 450,000 Market: 0 Agricultural: 0 Common: 450,000 PRINTED 08/02/2023 BY SYS