TRACTS 11 & 10
OR 768/438 & OR 897/770
HUTCHINS SOUTH BEACH PB 4/70

EMBRY PAUL S & LINDA D
2996 1ST AV
FERNANDINA BEACH, FL 32034

2023

00-00-31-1390-0011-0000

BUILDING CHARACTERISTICS

ELEMENT	CD	CONSTRUCTION
Exterior Wall	12	CEDAR 100
Roof Structur	03	GABLE/HIP 100
Roof Cover	03	COMP SHNGL 100
Interior Wall	05	DRYWALL 100
Interior Floo	14	CARPET 90
Interior Floo	11	CLAY TILE 10
Air Condition	03	CENTRAL 100
Heating Type	04	AIR DUCTED 100
Bedrooms		2 100
Bathrooms		2 100
Frame	02	WOOD FRAME 100
Stories	2.	2. 100
Units		0 100
Occupancy	00	NONE 100
Quality	04	Quality Level 04
DOR CODE	0100	SINGLE FAMILY
MAP NUM		MKT AREA 01
NEIGHBORHOOD/LOC	1043.00	

AREA TYPE	TOTAL GROSS AREA	PCT OF BASE	TOT ADJ AREA	SUBAREA MARKET VALUE
BAL	72	15	11	916
BAL	283	15	42	3,497
BAL	392	15	59	4,912
BAS	1,108	100	1,108	92,252
FOP	76	30	23	1,915
FSP	204	40	82	6,827
FUS	791	100	791	65,859
UCP	1,120	20	224	18,650
UOP	90	20	18	1,499
UST	232	45	104	8,659
TOTALS	4,368		2,462	204,987

MARKET ADJUSTMENTS

TYPE	MDL	EFF. AREA	TOT ADJ PTS	EFF. BASE RATE	REPL. COST NEW	AYB	EYB	ECON	FNCT		NORM	% COND
0100	01	2,462	113.1984	102.16	251,518	1985	1985	0	0	0	18.50	81.50

1 SINGLE FAM – 100% - 1997 Heated Area: 1899 HX Base Yr 1997

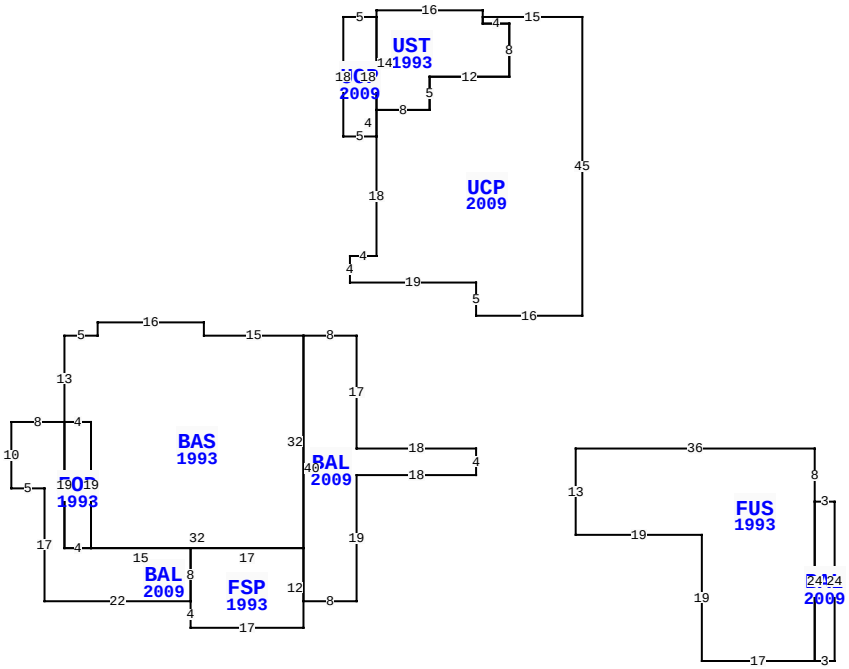

2996 1ST AVE, FERNANDINA BEACH

BLD DATE		LGL DATE	
XF DATE		LAND DATE	
INC DATE		AG DATE	

NASSAU COUNTY PROPERTY

PAGE 1 of 1 2

VALUATION SUMMARY

VALUATION BY		STANDARD
Tax Group: 2	Tax Dist:	
BUILDING MARKET VALUE		204,987
TOTAL MARKET OB/XF VALUE		14,376
TOTAL LAND VALUE - MARKET		700,000
TOTAL MARKET VALUE		919,363
SOH/AGL Deduction		670,480
ASSESSED VALUE		248,883
TOTAL EXEMPTION VALUE	HX HB	50,000
BASE TAXABLE VALUE		198,883
TOTAL JUST VALUE		919,363
NCON VALUE		0
INCOME VALUE		
PREVIOUS YEAR MKT VALUE		922,364

PERMIT NUM	DESCRIPTION	AMT	ISSUED
20102020	H/AC	4,000	11/23/2010
20090992	REPAIR/RRF	6,700	07/27/2009

SALES DATA

OFF RECORD Number	DATE	TYPE INST	Q / U	V / I	RSN CD	SALE PRICE
0768/0438	8/13/1996	WD	Q	I		143,500

GRANTOR: STEWART SAMUEL E JR T

GRANTEE: EMBRY PAUL & LINDA

BUILDING NOTES

BUILDING DIMENSIONS

BAL=[YR=2009] W18 N17 W8 BAS=[YR=1993] W15 N2 W16 S2 W5 S13 BAL=[YR=2009] W8 S10 E5 S17 E22 FSP=[YR=1993] S4 E17 N12 W17 S8 $ N8 W15 FOP=[YR=1993] N19 W4 S19 E4$ W4 N19$ E4 S19 E32 N32$ S40 E8 N19 E18 N4$ PTR= E15 FUS=[YR=1993] E36 S8 BAL=[YR=2009] E3 S24 W3 N24$ S24 W17 N19 W19 N13$ W15 $ PTR=N20 UCP=[YR=2009] N5 W19 N4 E4 N18 UOP=[YR=2009] W5 N18 E5 UST=[YR=1993] N1 E16 S2 E4 S8 W12 S5 W8 N14$ S18$ N4 E8 N5 E12 N8 W4 N1 E15 S45 W16$ S20$.

EXTRA FEATURES

LN	OB/XF CODE	DESCRIPTION	BLD	CAP	L	W	UNITS	UT	Adj R	ADJ UNIT PRICE	ORIG COND	YEAR ON	YEAR ACTUAL	Q	% COND	OB/XF MKT VALUE	NOTES
1	0500	FP-PRE FAB	0	100	0	0	1.00	UT	3,500.00	3,500.00	100	1985	1985	3	60	2,100	
2	0810	CONCRETE A	0	100	0	0	2,196.00	SF	6.50	6.50	100	2004	2004	3	86	12,276	

LAND DESCRIPTION

TOTAL OB/XF 14,376

LN	USE CODE	CLS	LAND USE DESCRIPTION	CAP	RD	LOC ZONE	FRONT	DEPTH	TOT LND UTS	UNIT TYPE	DT	DPTH FACT	% COND	TOT ADJ	UNIT PRICE	ADJ UNIT PRICE	LAND VALUE	OTHER ADJUSTMENTS AND NOTES	YEAR	DENSITY	DECL	FRZ	YR	CONSRV
1	000100	C	SFR	100			100.00	120.00	100.00	FF		1.00	1.00	1.00	4,000.00	4,000.00	400,000							
2	000100	C	SFR	100			75.00	120.00	75.00	FF		1.00	1.00	1.00	4,000.00	4,000.00	300,000							

REVIEW DATE 03/25/2020 BY DJA Total Acres: 0.00 Total Land Value: 700,000 Market: 0 Agricultural: 0 Common: 700,000 PRINTED 08/02/2023 BY SYS