LOT 17
HIGHLAND HILLS PB 6/231

MARTIN RAMSEY ALEXANDER & SCOTT PATRICK
594 AMELIA CIR
FERNANDINA BEACH, FL 32034

2023

00-00-31-1383-0017-0000

NASSAU COUNTY PROPERTY

BUILDING CHARACTERISTICS

ELEMENT	CD	CONSTRUCTION
Exterior Wall	10	ABOVE AVG 60
Exterior Wall	23	REINF CONC 40
Roof Structur	03	GABLE/HIP 100
Roof Cover	03	COMP SHNGL 100
Interior Wall	05	DRYWALL 100
Interior Floo	12	HARDWOOD 80
Interior Floo	08	SHT VINYL 20
Air Condition	03	CENTRAL 100
Heating Type	04	AIR DUCTED 100
Bedrooms		3 100
Bathrooms		2.5 100
Frame	02	WOOD FRAME 100
Stories	1.5	1.5 100
Units		0 100
Occupancy	00	NONE 100
Quality	03	Quality Level 03
DOR CODE	0100	SINGLE FAMILY
MAP NUM		MKT AREA 01
NEIGHBORHOOD/LOC	1007.00	

AREA TYPE	TOTAL GROSS AREA	PCT OF BASE	TOT ADJ AREA	SUBAREA MARKET VALUE
BAS	2,101	100	2,101	246,661
DCK	52	10	5	587
FGR	484	55	266	31,229
FOP	39	30	12	1,409
FSP	192	40	77	9,040
FST	984	55	541	63,514
STR	88	10	9	1,057
UOP	192	20	38	4,461
TOTALS	4,132		3,049	357,957

MARKET ADJUSTMENTS

TYPE	MDL	EFF. AREA	TOT ADJ PTS	EFF. BASE RATE	REPL. COST NEW	AYB	EYB	ECON	FNCT		NORM	% COND
0900	01	3,049	106.5360	126.51	385,729	2007	2007	0	0	0	7.20	92.80

1 SNGL FAM – 50% - 2022 Heated Area: 2101 HX Base Yr 2022

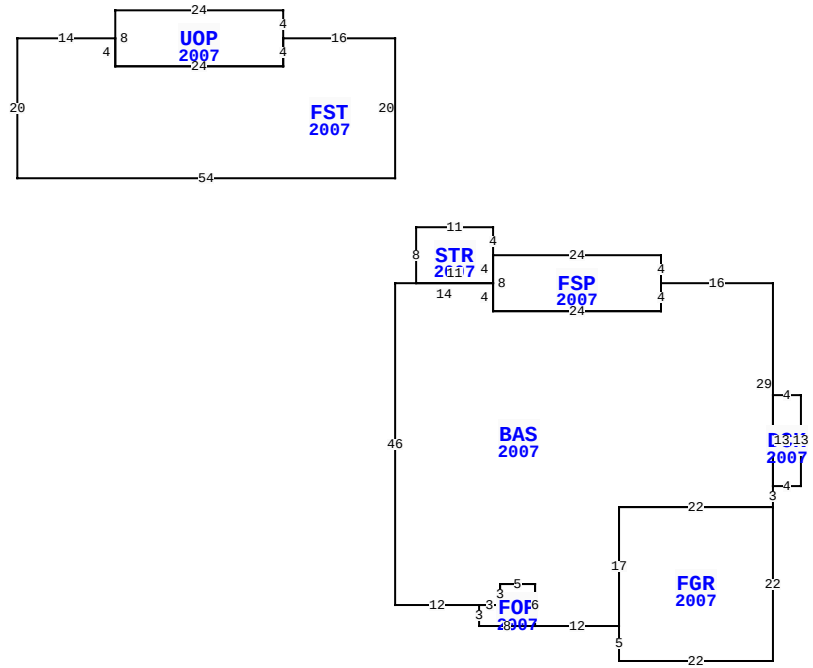

BLD DATE	02/04/2014 KK	LGL DATE	
XF DATE		LAND DATE	
INC DATE		AG DATE	

594 AMELIA CIR, FERNANDINA BEACH

VALUATION SUMMARY

VALUATION BY		STANDARD
Tax Group: 2	Tax Dist:	
BUILDING MARKET VALUE		357,957
TOTAL MARKET OB/XF VALUE		13,548
TOTAL LAND VALUE - MARKET		225,000
TOTAL MARKET VALUE		596,505
SOH/AGL Deduction		54,456
ASSESSED VALUE		542,049
TOTAL EXEMPTION VALUE	HA HAB	50,000
BASE TAXABLE VALUE		492,049
TOTAL JUST VALUE		596,505
NCON VALUE		0
INCOME VALUE		
PREVIOUS YEAR MKT VALUE		508,966

PERMIT NUM	DESCRIPTION	AMT	ISSUED
20062249	GAS	350	09/29/2006
20062248	H/AC	8,400	09/28/2006
20062223	OTHER	1,200	09/25/2006
20061560	TEMP POLE	0	07/05/2006
20061433	NEW CONSTR	225,000	06/23/2006
20061338	DEMOLITION	3,500	06/14/2006

SALES DATA

OFF RECORD Number	DATE	TYPE INST	Q U	V I	RSN CD	SALE PRICE
2649/1017	6/21/2023	WD	Q	I	01	755,000
GRANTOR: NEVILLE HEIDI LEE &						
GRANTEE: MARTIN RAMSEY ALEXA						
2525/1977	12/29/2021	WD	U	I	30	335,000
GRANTOR: NEVILLE NANCY						
GRANTEE: CASTRONOVO KENNETH						

BUILDING NOTES

BUILDING DIMENSIONS

FST=[YR=2007] W16 UOP=[YR=2007] N4W24S8E24 N4$ S4W24N4W14S20E54N20$ PTR= S35 BAS=[YR=2007] S46E12 FOP=[YR=2007] S3 E8N6W5S3W3$ E3N3E5S6E12 FGR=[YR=2007] S5E22N22W22S17$ N17E22 N3 DCK=[YR=2007] E4N13W4S13$N29 W16 FSP=[YR=2007] N4W24 STR=[YR=2007] N4W11S8 E11N4$S8E24N4$ S4W24N4 W14$ N35$.

EXTRA FEATURES

LN	OB/XF CODE	DESCRIPTION	BLD	CAP	L	W	UNITS	UT	Adj R	ADJ UNIT PRICE	ORIG COND	YEAR ON	YEAR ACTUAL	Q	% COND	OB/XF MKT VALUE	NOTES
1	0500	FP-PRE FAB	0	50	0	0	1.00	UT	3,500.00	3,500.00	100	2007	2007	3	92	3,220	
2	0877	JACUZZI	0	50	0	0	1.00	UT	1,000.00	1,000.00	100	2007	2007	3	35	350	
3	0920	CWALL-WD/M	0	50	0	0	9.00	LF	390.00	390.00	100	2007	2007	3	35	1,229	
4	0810	CONCRETE A	0	50	0	0	1,475.00	SF	6.50	6.50	100	2007	2007	3	89	8,533	
5	1242	WD DECK A	0	50	0	0	48.00	SF	10.00	10.00	100	2009	2009	3	45	216	

LAND DESCRIPTION

TOTAL OB/XF 13,548

LN	USE CODE	CLS	LAND USE DESCRIPTION	CAP	RD	LOC ZONE	FRONT	DEPTH	TOT LND UTS	UNIT TYPE	DT	DPTH FACT	% COND	TOT ADJ	UNIT PRICE	ADJ UNIT PRICE	LAND VALUE	OTHER ADJUSTMENTS AND NOTES	YEAR	DENSITY	DECL	FRZ	YR	CONSRV
1	000100	C	SFR	50	0003	R-1	0.00	0.00	1.00	LT		1.00	1.00	1.00	225,000.00	225,000.00	225,000							

REVIEW DATE 08/30/2019 BY DJA Total Acres: 0.00 Total Land Value: 225,000 Market: 0 Agricultural: 0 Common: 225,000 PRINTED 08/02/2023 BY SYS