LOT 9
HIGHLAND DUNES PB 7/311

CAWLEY DAVID JR &/COCKERHAM AMBER
1624 HIGHLAND DUNES WAY
FERNANDINA BEACH, FL 32034

2023

00-00-31-1375-0009-0000

NASSAU COUNTY PROPERTY

BUILDING CHARACTERISTICS

ELEMENT	CD	CONSTRUCTION
Exterior Wall	10	ABOVE AVG 50
Exterior Wall	23	REINF CONC 50
Roof Structur	08	IRREGULAR 100
Roof Cover	03	COMP SHNGL 100
Interior Wall	05	DRYWALL 100
Interior Floo	12	HARDWOOD 90
Interior Floo	15	HARDTILE 10
Air Condition	03	CENTRAL 100
Heating Type	04	AIR DUCTED 100
Bedrooms		3 100
Bathrooms		2.5 100
Frame	02	WOOD FRAME 100
Stories	2.	2. 100
Units		0 100
Occupancy	00	NONE 100
Quality	04	Quality Level 04

DOR CODE	0100	SINGLE FAMILY	
MAP NUM		MKT AREA	01
NEIGHBORHOOD/LOC	1104.00		

AREA TYPE	TOTAL GROSS AREA	PCT OF BASE	TOT ADJ AREA	SUBAREA MARKET VALUE
BAS	1,986	100	1,986	315,870
FGR	472	55	260	41,353
FOP	132	30	40	6,362
FOP	175	30	52	8,271
FST	32	55	18	2,863
STR	28	10	3	477
UOP	132	20	26	4,135
UST	1,986	45	894	142,189
TOTALS	4,943		3,279	521,519

MARKET ADJUSTMENTS

TYPE	MDL	EFF. AREA	TOT ADJ PTS	EFF. BASE RATE	REPL. COST NEW	AYB	EYB	ECON	FNCT		NORM	% COND
0500	01	3,279	117.1758	166.98	547,527	2012	2012	0	0	0	4.75	95.25

1 SFR CUST – 0% - 2023 Heated Area: 1986 HX Base Yr

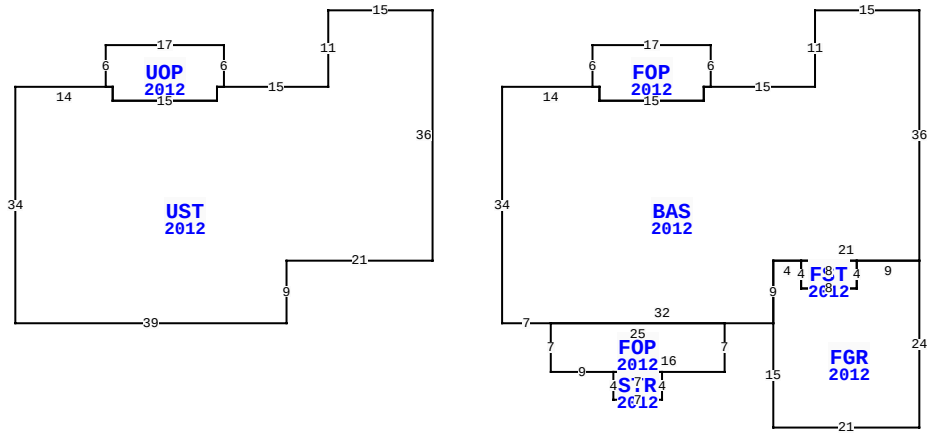

1624 HIGHLAND DUNES WAY, FERNANDINA BEACH

BLD DATE		LGL DATE	
XF DATE		LAND DATE	
INC DATE		AG DATE	

VALUATION SUMMARY

VALUATION BY	STANDARD
Tax Group: 2	Tax Dist:
BUILDING MARKET VALUE	521,519
TOTAL MARKET OB/XF VALUE	6,284
TOTAL LAND VALUE - MARKET	200,000
TOTAL MARKET VALUE	727,803
SOH/AGL Deduction	0
ASSESSED VALUE	727,803
TOTAL EXEMPTION VALUE	0
BASE TAXABLE VALUE	727,803
TOTAL JUST VALUE	727,803
NCON VALUE	0
INCOME VALUE	
PREVIOUS YEAR MKT VALUE	595,433

PERMIT NUM	DESCRIPTION	AMT	ISSUED
20120548	NEW CONSTR	239,971	03/22/2012

SALES DATA

OFF RECORD Number	DATE	TYPE INST	Q / U	V / I	RSN CD	SALE PRICE
2397/0707	9/29/2020	WD	Q	I	01	529,900
GRANTOR: BENTON BERT D III & M						
GRANTEE: CAWLEY DAVID JR & A						
1820/1118	10/17/2012	WD	Q	I	02	400,000
GRANTOR: HIGHLAND 35 LLC						
GRANTEE: BENTON BERT DURELL						

BUILDING NOTES

BUILDING DIMENSIONS

UST=[YR=2012] W15S11W15 UOP=[YR=2012] N6 W17S6E1S2E15N2E1$ W1S2W15N2W14 S34E39N9E21N36$ PTR=S11E10 BAS=[YR=2012] S34E7 FOP=[YR=2012] S7E9 STR=[YR=2012] S4E7N4W7$ E16N7W25$ E32 FGR=[YR=2012] S15E21N24 W9 FST=[YR=2012] W8S4E8N4$ S4W8N4W4S9$ N9E21N36W15S11W15 FOP=[YR=2012] N6 W17S6E1S2E15N2E1$ W1S2W15N2W14 $ W10N11$.

EXTRA FEATURES

L N	OB/XF CODE	DESCRIPTION	BLD	CAP	L	W	UNITS	UT	Adj R	ADJ UNIT PRICE	ORIG COND	YEAR ON	YEAR ACTUAL	Q	% COND	OB/XF MKT VALUE	NOTES
1	0855	CONC PAVER	0	0	0	0	830.00	SF	7.00	7.00	100	2012	2012	3	94	5,461	
2	0855	CONC PAVER	0	0	25	5	125.00	SF	7.00	7.00	100	2012	2012	3	94	823	

LAND DESCRIPTION

TOTAL OB/XF 6,284

L N	USE CODE	CLS	LAND USE DESCRIPTION	CAP	R D	LOC ZONE	FRONT	DEPTH	TOT LND UTS	UNIT TYPE	D T	DPTH FACT	% COND	TOT ADJ	UNIT PRICE	ADJ UNIT PRICE	LAND VALUE	OTHER ADJUSTMENTS AND NOTES	YEAR	DENSITY	DECL	FRZ	YR	CONSRV
1	000100	C	SFR	0	0003	R-1	0.00	0.00	1.00	LT		1.00	1.00	1.00	200,000.00	200,000.00	200,000							

REVIEW DATE 01/14/2022 BY TW Total Acres: 0.00 Total Land Value: 200,000 Market: 0 Agricultural: 0 Common: 200,000 PRINTED 08/02/2023 BY SYS