LOT 39
IN OR 1921/517 & OR 1921/519
HAMBYS SUB PB 2/32

KERNS DAVID & LISA 2013 TRUST/KERNS DAVID G TRUSTE
P O BOX 16254
FERNANDINA BEACH, FL 32035

2023

00-00-31-1360-0039-0000

BUILDING CHARACTERISTICS

ELEMENT	CD	CONSTRUCTION
Exterior Wall	10	ABOVE AVG 100
Roof Structur	03	GABLE/HIP 100
Roof Cover	13	STAND SEAM 100
Interior Wall	05	DRYWALL 100
Interior Floo	12	HARDWOOD 60
Interior Floo	11	CLAY TILE 40
Air Condition	03	CENTRAL 100
Heating Type	04	AIR DUCTED 100
Bedrooms		3 100
Bathrooms		3.5 100
Frame	04	REIN CONC 100
Stories	3.	3. 100
Units		0 100
Quality	06	Quality Level 06
DOR CODE	0100	SINGLE FAMILY
MAP NUM		MKT AREA 01
NEIGHBORHOOD/LOC	1052.00	

AREA TYPE	TOTAL GROSS AREA	PCT OF BASE	TOT ADJ AREA	SUBAREA MARKET VALUE
BAL	55	15	8	1,708
BAL	90	15	14	2,990
BAL	130	15	20	4,271
BAS	342	100	342	73,030
DCK	189	10	19	4,058
FGR	648	55	356	76,019
FOP	24	30	7	1,494
FOP	46	30	14	2,990
FOP	120	30	36	7,687
FOP	220	30	66	14,093
TOTALS	6,187		4,700	1,003,624

MARKET ADJUSTMENTS

TYPE	MDL	EFF. AREA	TOT ADJ PTS	EFF. BASE RATE	REPL. COST NEW	AYB	EYB	ECON	FNCT		NORM	% COND
0500	11	4,700	150.6049	214.61	1,008,667	2020	2020	0	0	0	0.50	99.50

2 SFR CUST – 100% - 2021 Heated Area: 3812 HX Base Yr 2021

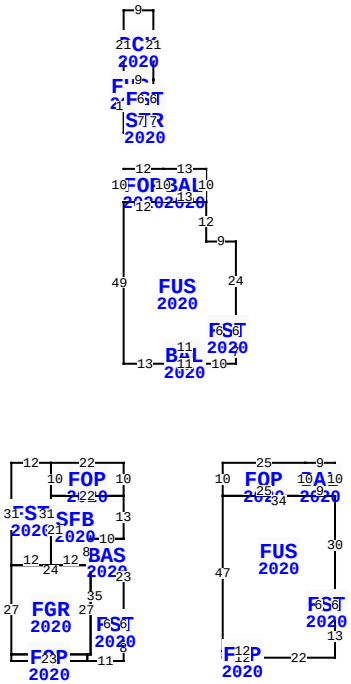

** This building has 21 Sub-Areas

2220 S FLETCHER AVE, FERNANDINA BEACH

BLD DATE		LGL DATE	
XF DATE		LAND DATE	
INC DATE		AG DATE	

NASSAU COUNTY PROPERTY

PAGE 1 of 1 2

VALUATION SUMMARY

VALUATION BY		STANDARD
Tax Group: 2	Tax Dist:	
BUILDING MARKET VALUE		1,003,624
TOTAL MARKET OB/XF VALUE		61,938
TOTAL LAND VALUE - MARKET		900,000
TOTAL MARKET VALUE		1,965,562
SOH/AGL Deduction		191,874
ASSESSED VALUE		1,773,688
TOTAL EXEMPTION VALUE	HX HB VX	55,000
BASE TAXABLE VALUE		1,718,688
TOTAL JUST VALUE		1,965,562
NCON VALUE		0
INCOME VALUE		
PREVIOUS YEAR MKT VALUE		2,020,068

PERMIT NUM	DESCRIPTION	AMT	ISSUED
20181597	CO ISSUED	0	04/06/2020
20181597	NEW CONSTR	492,119	05/10/2018
20141498	DEMOLITION	14,000	07/09/2014

SALES DATA

OFF RECORD Number	DATE	TYPE INST	Q / U	V / I	RSN CD	SALE PRICE
1921/0519	5/30/2014	WD	Q	I	01	1,100,000
GRANTOR: ALDRED ANDREW CHEATHA						
GRANTEE: KERNS DAVID G & LIS						
1921/0517	5/30/2014	PR	U	I	19	100
GRANTOR: ALDRED ANDREW CHEATHA						
GRANTEE: KERNS DAVID G & LIS						

BUILDING NOTES

EXTRA FEATURES

LN	OB/XF CODE	DESCRIPTION	BLD	CAP	L	W	UNITS	UT	Adj R	ADJ UNIT PRICE	ORIG COND	YEAR ON	YEAR ACTUAL	Q	% COND	OB/XF MKT VALUE	NOTES
4	0409	ELEVATOR R	0	100	0	0	1.00	UT	14,280.00	14,280.00	100	2020	2020	3	100	14,280	
5	0504	FP-ELECTRI	0	100	0	0	1.00	UT	2,000.00	2,000.00	100	2020	2020	3	99	1,980	
6	0855	CONC PAVER	0	100	0	0	2,179.00	SF	10.00	10.00	100	2020	2020	3	99	21,572	
7	0416	DUNEWALKS	0	100	0	0	864.00	SF	30.00	30.00	100	2020	2020	3	93	24,106	

BUILDING DIMENSIONS

FOP=[YR=2020] W22 FST=[YR=2020] W12 S31 FGR=[YR=2020] S27 FOP=[YR=2020] S2 E23 BAS=[YR=2020] E11 N8 FST=[YR=2020] N6 W5 S6 E5 $ W5 N6 E5 N23 SFB=[YR=2020] N13 W22 S21 E12 N8 E10 $ W10 S35 W1 S2 $ N2 W23 $ E24 N27 W24 $ E12 N31 $ S10 E22 N10 $ PTR= E30 FOP=[YR=2020] E25 BAL=[YR=2020] E9 S10 FUS=[YR=2020] S30 FST=[YR=2020] W5 S6 E5 N6 $ W5 S6 E5 S13 W22 FOP=[YR=2020] W12 N2 E12 S2 $ N2 W12 N47 E34 $ W9 N10 $ S10 W25 N10 $ W30 $ PTR= N30 FUS=[YR=2020] N49 FOP=[YR=2020] N10 E12 BAL=[YR=2020] E13 S10 W13 N10 $ S10 W12 $ E25 S12 E9 S24 FST=[YR=2020] S6 W5 N6 E5 $ W5 S6 E5 S7 W10 BAL=[YR=2020] W11 N5 E11 S5 $ N5 W11 S5 W13 $ S30 $ PTR= N100 FUS=[YR=2020] N16 DCK=[YR=2020] N21 E9 S21 W9 $ E9 S3

LAND DESCRIPTION

TOTAL OB/XF 61,938

LN	USE CODE	CLS	LAND USE DESCRIPTION	CAP	RD	LOC ZONE	FRONT	DEPTH	TOT LND UTS	UNIT TYPE	DT	DPTH FACT	% COND	TOT ADJ	UNIT PRICE	ADJ UNIT PRICE	LAND VALUE	OTHER ADJUSTMENTS AND NOTES	YEAR	DENSITY	DECL	FRZ	YR	CONSRV
1	000120	C	SFR OCN FT	100			50.00	250.00	50.00	FF		1.00	1.00	1.20	15,000.00	18,000.00	900,000							

REVIEW DATE 02/24/2021 BY RK Total Acres: 0.00 Total Land Value: 900,000 Market: 0 Agricultural: 0 Common: 900,000 PRINTED 08/02/2023 BY SYS