LOT 246-B
IN OR 2189/1294
DECLARATION CVNTS & RSTR

KELLNER DENNIS &/BROWN TAMARA S
2806 SUWANEE AVE
FERNANDINA BEACH, FL 32034

2023

00-00-31-134B-0246-00B0

BUILDING CHARACTERISTICS

ELEMENT	CD	CONSTRUCTION
Exterior Wall	16	WD FR STUC 100
Roof Structur	08	IRREGULAR 100
Roof Cover	03	COMP SHNGL 100
Interior Wall	05	DRYWALL 100
Interior Floo	14	CARPET 70
Interior Floo	08	SHT VINYL 30
Air Condition	03	CENTRAL 100
Heating Type	04	AIR DUCTED 100
Bedrooms		3 100
Bathrooms		2 100
Frame	02	WOOD FRAME 100
Stories	2.	2. 100
Units		0 100
Occupancy	00	NONE 100
Quality	04	Quality Level 04

DOR CODE 0100 SINGLE FAMILY
MAP NUM | MKT AREA 01
NEIGHBORHOOD/LOC 1041.0100

AREA TYPE	TOTAL GROSS AREA	PCT OF BASE	TOT ADJ AREA	SUBAREA MARKET VALUE
BAS	657	100	657	65,326
FGR	338	55	186	18,494
FUS	916	100	916	91,079
PTO	120	5	6	596
UOP	42	20	8	796
UOP	45	20	9	894
TOTALS	2,118		1,782	177,186

MARKET ADJUSTMENTS

TYPE	MDL	EFF. AREA	TOT ADJ PTS	EFF. BASE RATE	REPL. COST NEW	AYB	EYB	ECON	FNCT		NORM	% COND
0320	01	1,782	117.6000	111.72	199,085	1993	2000	0	0	0	11.00	89.00

1 TOWNHOUSE - 0% - 0 Heated Area: 1573 HX Base Yr

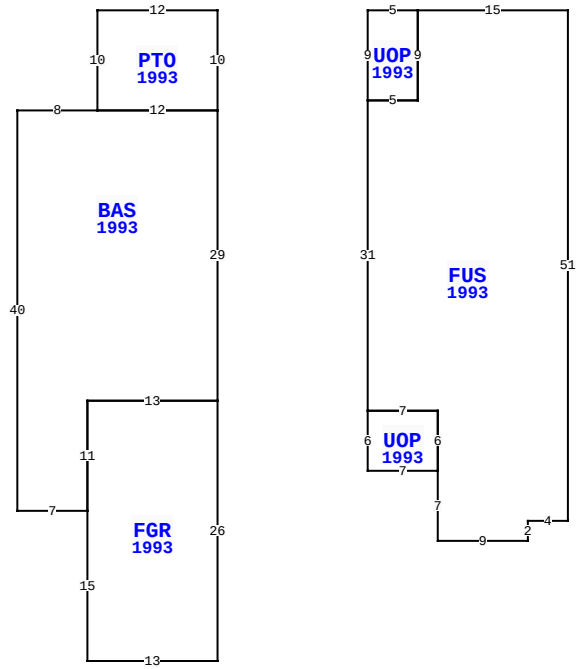

532 TARPON AVE, FERNANDINA BEACH

BLD DATE		LGL DATE	
XF DATE		LAND DATE	
INC DATE		AG DATE	

NASSAU COUNTY PROPERTY

PAGE 1 of 1 2

VALUATION SUMMARY

VALUATION BY	STANDARD
Tax Group: 2	Tax Dist:
BUILDING MARKET VALUE	177,186
TOTAL MARKET OB/XF VALUE	2,736
TOTAL LAND VALUE - MARKET	187,500
TOTAL MARKET VALUE	367,422
SOH/AGL Deduction	0
ASSESSED VALUE	367,422
TOTAL EXEMPTION VALUE	0
BASE TAXABLE VALUE	367,422
TOTAL JUST VALUE	367,422
NCON VALUE	0
INCOME VALUE	
PREVIOUS YEAR MKT VALUE	335,229

PERMIT NUM	DESCRIPTION	AMT	ISSUED
20041795	REROOF W/30YR SHN	0	10/05/2004
9950-B	REPAIR/RRF	5,500	07/29/1996

SALES DATA

OFF RECORD Number	DATE	TYPE INST	Q / U	V / I	RSN CD	SALE PRICE
2189/1294	4/09/2018	WD	Q	I	05	490,000
GRANTOR: BELL SUSAN K						
GRANTEE: KELLNER DENNIS & TA						
0683/1815	6/30/1993	WD	U	I	09	175,000
GRANTOR: TREVETT HOMES INC						
GRANTEE: BELL SUSAN K						

BUILDING NOTES

BUILDING DIMENSIONS

PTO=[YR=1993] W12 S10 BAS=[YR=1993] W8 S40 E7 FGR=[YR=1993] S15 E13 N26 W13 S11 $ N11 E13 N29 W12 $ E12 N10 $ PTR= E15 UOP=[YR=1993] E5 FUS=[YR=1993] E15 S51 W4 S2 W9 N7 UOP=[YR=1993] N6 W7 S6 E7 $ N6 W7 N31 E5 N9 $ S9 W5 N9 $ W15 $.

EXTRA FEATURES

LN	OB/XF CODE	DESCRIPTION	BLD	CAP	L	W	UNITS	UT	Adj R	ADJ UNIT PRICE	ORIG COND	YEAR ON	YEAR ACTUAL	Q	% COND	OB/XF MKT VALUE	NOTES
1	0810	CONCRETE A	0	0	0	0	455.00	SF	6.50	6.50	100	1993	1993	3	68	2,011	
2	1241	WD DECK G	0	0	8	7	56.00	UT	11.50	11.50	100	1993	1993	3	20	129	
3	1241	WD DECK G	0	0	8	20	160.00	UT	15.53	15.53	100	1995	1995	3	24	596	

LAND DESCRIPTION

TOTAL OB/XF 2,736

LN	USE CODE	CLS	LAND USE DESCRIPTION	CAP	RD	LOC ZONE	FRONT	DEPTH	TOT LND UTS	UNIT TYPE	DT	DPTH FACT	% COND	TOT ADJ	UNIT PRICE	ADJ UNIT PRICE	LAND VALUE	OTHER ADJUSTMENTS AND NOTES	YEAR	DENSITY	DECL	FRZ	YR	CONSRV
1	000100	C	SFR	0	0006	R-2	25.00	100.00	25.00	FF		1.00	1.00	1.50	5,000.00	7,500.00	187,500							

REVIEW DATE 04/30/2018 BY DJX Total Acres: 0.00 Total Land Value: 187,500 Market: 0 Agricultural: 0 Common: 187,500 PRINTED 08/02/2023 BY SYS