LOT 144
IN OR 1982/600
GA FDNA BEACH 2 UNR

SEPTEMBER FIRST PARTNERS FLORIDA LLC
957 BELLVIEW RD
MCLEAN, VA 22102

2023

00-00-31-134B-0144-0000

BUILDING CHARACTERISTICS

ELEMENT	CD	CONSTRUCTION
Exterior Wall	10	ABOVE AVG 100
Roof Structur	03	GABLE/HIP 100
Roof Cover	03	COMP SHNGL 100
Interior Wall	05	DRYWALL 100
Interior Floo	11	CLAY TILE 70
Interior Floo	14	CARPET 30
Air Condition	03	CENTRAL 100
Heating Type	04	AIR DUCTED 100
Bedrooms		2 100
Bathrooms		1.5 100
Frame	07	SPECIAL 100
Stories	1.5	1.5 100
Units		0 100
Occupancy	00	NONE 100
Quality	03	Quality Level 03
DOR CODE	0100	SINGLE FAMILY
MAP NUM		MKT AREA 01
NEIGHBORHOOD/LOC	1041.00	

AREA TYPE	TOTAL GROSS AREA	PCT OF BASE	TOT ADJ AREA	SUBAREA MARKET VALUE
BAL	24	15	4	546
BAL	185	15	28	3,820
BAS	936	100	936	127,693
DCK	232	10	23	3,138
FDU	80	65	52	7,094
FOP	164	30	49	6,685
FOP	192	30	58	7,913
STR	32	10	3	409
STR	114	10	11	1,501
UST	32	45	14	1,910
TOTALS	1,991		1,178	160,709

MARKET ADJUSTMENTS

TYPE	MDL	EFF. AREA	TOT ADJ PTS	EFF. BASE RATE	REPL. COST NEW	AYB	EYB	ECON	FNCT		NORM	% COND
0900	01	1,178	128.3660	152.43	179,563	1989	2000	0	0	0	10.50	89.50

1 SNGL FAM – 0% - 0 Heated Area: 936 HX Base Yr

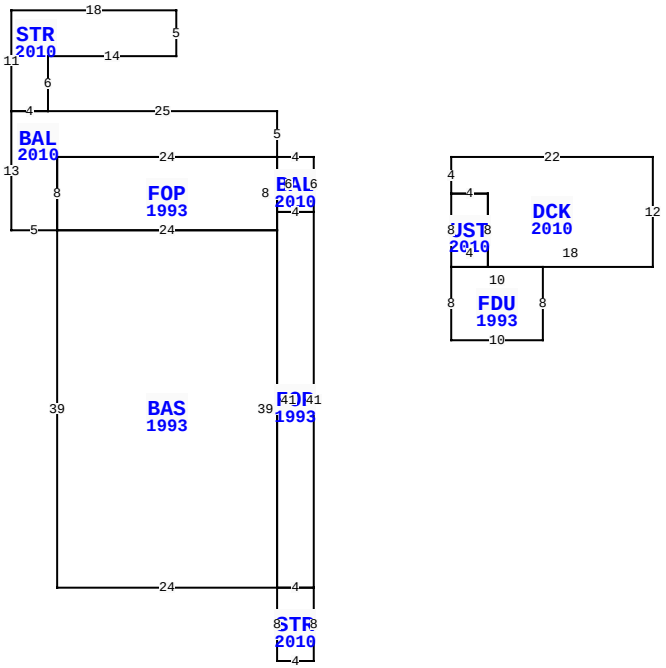

624 N FLETCHER AVE, FERNANDINA BEACH

BLD DATE		LGL DATE	
XF DATE		LAND DATE	
INC DATE		AG DATE	

NASSAU COUNTY PROPERTY

PAGE 1 of 1 2

VALUATION SUMMARY

VALUATION BY	STANDARD
Tax Group: 2	Tax Dist:
BUILDING MARKET VALUE	160,709
TOTAL MARKET OB/XF VALUE	8,678
TOTAL LAND VALUE - MARKET	318,750
TOTAL MARKET VALUE	488,137
SOH/AGL Deduction	8,373
ASSESSED VALUE	479,764
TOTAL EXEMPTION VALUE	0
BASE TAXABLE VALUE	479,764
TOTAL JUST VALUE	488,137
NCON VALUE	0
INCOME VALUE	
PREVIOUS YEAR MKT VALUE	465,073

PERMIT NUM	DESCRIPTION	AMT	ISSUED
20090532	XFOB	0	04/27/2009
20071267	XFOB	4,500	07/10/2007
20020416	REPAIR/RRF	3,000	03/11/2002
2004416	REMODEL	18,000	11/28/2000
8407	XFOB	300	06/29/1994
3361B	NEW CONSTR	32,000	07/01/1985

SALES DATA

OFF RECORD Number	DATE	TYPE INST	Q / U	V / I	RSN CD	SALE PRICE
1982/0600	5/27/2015	WD	Q	I	01	365,000
GRANTOR: O'KEEFE MICHAEL C						
GRANTEE: SEPTEMBER FIRST PAR						
1821/1835	10/25/2012	QC	U	I	11	100
GRANTOR: O'KEEFE AMY L						
GRANTEE: O'KEEFE MICHAEL						

BUILDING NOTES

BUILDING DIMENSIONS

BAL=[YR=2010] W4 BAL=[YR=2010] N5 W25 STR=[YR=2010] N6 E14 N5 W18 S11 E4 $ W4 S13 E5 N8 E24 $ FOP=[YR=1993] W24 S8 BAS=[YR=1993] S39 E24 STR=[YR=2010] S8 E4 N8 W4 $ FOP=[YR=1993] E4 N41 W4 S41 $ N39 W24 $ E24 N8 $ S6 E4 N6 $ PTR= E15 DCK=[YR=2010] S4 UST=[YR=2010] S8 FDU=[YR=1993] S8 E10 N8 W10 $ E4 N8 W4 $ E4 S8 E18 N12 W22 $ W15 $.

EXTRA FEATURES

LN	OB/XF CODE	DESCRIPTION	BLD	CAP	L	W	UNITS	UT	Adj R	ADJ UNIT PRICE	ORIG COND	YEAR ON	YEAR ACTUAL	Q	% COND	OB/XF MKT VALUE	NOTES
1	0940	SHEDS/PORT	0	0	12	10	120.00	SF	30.00	30.00	100	1995	1995	3	20	720	
3	1242	WD DECK A	0	0	16	12	192.00	SF	4.00	4.00	100	1994	1994	3	20	154	
4	0820	WOOD WALK	0	0	20	3	66.00	SF	11.75	11.75	100	1994	1994	3	40	310	
8	0962	SKYLIGHT	0	0	0	0	1.00	UT	250.00	250.00	100	2002	2002	3	83	208	
9	0855	CONC PAVER	0	0	33	24	792.00	SF	10.00	10.00	100	2010	2010	3	92	7,286	

LAND DESCRIPTION

TOTAL OB/XF 8,678

LN	USE CODE	CLS	LAND USE DESCRIPTION	CAP	RD	LOC ZONE	FRONT	DEPTH	TOT LND UTS	UNIT TYPE	DT	DPTH FACT	% COND	TOT ADJ	UNIT PRICE	ADJ UNIT PRICE	LAND VALUE	OTHER ADJUSTMENTS AND NOTES	YEAR	DENSITY	DECL	FRZ	YR	CONSRV
1	000100	C	SFR	0	0006	R-2	75.00	100.00	75.00	FF		1.00	1.00	0.85	5,000.00	4,250.00	318,750							

REVIEW DATE 01/14/2021 BY TWA Total Acres: 0.00 Total Land Value: 318,750 Market: 0 Agricultural: 0 Common: 318,750 PRINTED 08/02/2023 BY SYS