LOT 185
IN OR 2040/1304 & OR 2040/1310
FOREST HILLS 4 PB 4/61

VANPUYMBROUCK ROBERT L & DONNA
2002 SUNRISE DR
FERNANDINA BEACH, FL 32034

2023

00-00-31-128D-0185-0000

NASSAU COUNTY PROPERTY

BUILDING CHARACTERISTICS

ELEMENT	CD	CONSTRUCTION
Exterior Wall	16	WD FR STUC 100
Roof Structur	08	IRREGULAR 100
Roof Cover	03	COMP SHNGL 100
Interior Wall	05	DRYWALL 100
Interior Floo	12	HARDWOOD 70
Interior Floo	14	CARPET 30
Air Condition	03	CENTRAL 100
Heating Type	04	AIR DUCTED 100
Bedrooms		4 100
Bathrooms		4.5 100
Frame	02	WOOD FRAME 100
Stories	1.5	1.5 100
Units		0 100
Quality	03	Quality Level 03
DOR CODE	0100	SINGLE FAMILY
MAP NUM		MKT AREA 01
NEIGHBORHOOD/LOC	1007.00	

AREA TYPE	TOTAL GROSS AREA	PCT OF BASE	TOT ADJ AREA	SUBAREA MARKET VALUE
BAS	3,029	100	3,029	570,391
BAS	81	100	81	15,253
FGR	805	55	443	83,421
FOP	62	30	19	3,578
FSP	1,080	40	432	81,350
FUS	1,140	100	1,140	214,674
UOP	28	20	6	1,130
UOP	36	20	7	1,318
UOP	1,620	20	324	61,012
TOTALS	7,881		5,481	1,032,127

MARKET ADJUSTMENTS

TYPE	MDL	EFF. AREA	TOT ADJ PTS	EFF. BASE RATE	REPL. COST NEW	AYB	EYB	ECON	FNCT		NORM	% COND
0500	11	5,481	136.9378	195.14	1,069,562	1994	2015	0	0	0	3.50	96.50

1 SFR CUST – 100% - 2017 Heated Area: 4250 HX Base Yr 2017

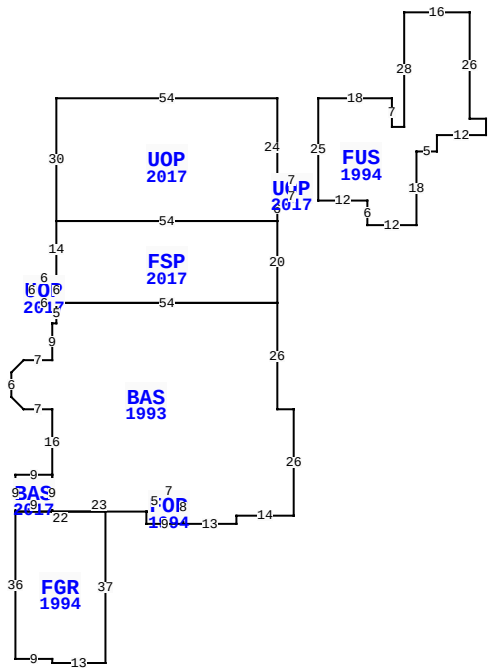

2002 SUNRISE DR, FERNANDINA BEACH

BLD DATE		LGL DATE	
XF DATE		LAND DATE	
INC DATE		AG DATE	

VALUATION SUMMARY

VALUATION BY		STANDARD
Tax Group: 2	Tax Dist:	
BUILDING MARKET VALUE		1,032,127
TOTAL MARKET OB/XF VALUE		211,324
TOTAL LAND VALUE - MARKET		450,000
TOTAL MARKET VALUE		1,693,451
SOH/AGL Deduction		503,563
ASSESSED VALUE		1,189,888
TOTAL EXEMPTION VALUE	HX HB	50,000
BASE TAXABLE VALUE		1,139,888
TOTAL JUST VALUE		1,693,451
NCON VALUE		56,717
INCOME VALUE		
PREVIOUS YEAR MKT VALUE		1,495,054

PERMIT NUM	DESCRIPTION	AMT	ISSUED
20211319	GARAGE	0	05/21/2021
20161484	CO ISSUED	0	04/27/2017
20163263	ALUMFNC	0	11/30/2016
20161484	ADDITION	200,680	05/26/2016
20101424	REPAIR/RRF	1,200	08/25/2010
20100471	REMODEL	15,400	03/19/2010

SALES DATA

OFF RECORD Number	DATE	TYPE INST	Q / U	V / I	RSN CD	SALE PRICE
2040/1310	4/15/2016	WD	U	I	11	100
GRANTOR: KEFFER RICHARD W JR R						
GRANTEE: VANPUYMBROUCK ROBER						
2040/1304	4/15/2016	WD	U	I	19	1,100,000
GRANTOR: KEFFER RICHARD W III						
GRANTEE: VANPUYMBROUCK ROBER						

BUILDING NOTES

BUILDING DIMENSIONS

UOP=[YR=2017] W54 S30 FSP=[YR=2017] S14 UOP=[YR=2017] W6S6E6N6$ S6 BAS=[YR=1993] S5W1S9W7 L3 D3 S6 D3 R3 E7S16 BAS=[YR=2017] W9S9 FGR=[YR=1994] S36E9S1 E13N37W22$E9 N9$ S9E23 FOP=[YR=1994] S3 E9 N8W7S5 W2$ E2N5 E7S8E13N2 E14N26 W4 N26 W54$ E54 N20 W54$ E54 N6 UOP=[YR=2017] E7 N4 W7 S4$ N24$ PTR=E10 FUS=[YR=1994] E18 S7 E3 N28 E16S26 E4 S4 W12 S4 W5 S18 W12 N6W12 N25$ W10$.

EXTRA FEATURES

LN	OB/XF CODE	DESCRIPTION	BLD	CAP	L	W	UNITS	UT	Adj R	ADJ UNIT PRICE	ORIG COND	YEAR ON	YEAR ACTUAL	Q	% COND	OB/XF MKT VALUE	NOTES
1	0855	CONC PAVER	0	100	0	0	3,994.00	SF	10.00	10.00	100	2017	2017	3	97	38,742	
2	0500	FP-PRE FAB	0	100	0	0	2.00	UT	3,500.00	3,500.00	100	1994	1994	3	77	5,390	
3	0940	SHEDS/PORT	0	100	8	12	96.00	SF	30.00	30.00	100	1994	1994	3	20	576	
4	0300	BOAT DCK W	0	100	41	6	246.00	SF	40.00	40.00	100	1989	1989	3	90	8,856	
5	0855	CONC PAVER	0	100	0	0	692.00	SF	15.00	15.00	100	2017	2017	3	97	10,069	
8	0920	CWALL-WD/M	0	100	0	0	280.00	LF	390.00	390.00	100	2003	2003	3	22	24,024	
10	0317	DCK PLNG W	0	100	0	0	2.00	UT	1,000.00	1,000.00	100	1989	1989	3	20	400	
14	0810	CONCRETE A	0	100	8	8	64.00	SF	6.50	6.50	100	1994	1994	3	70	291	
15	1124	CB/STC 4"	0	100	14	4	56.00	SF	6.50	6.50	100	1994	1994	3	70	255	
16	0861	POOL GUNIT	0	100	0	0	512.00	SF	85.00	85.00	100	2017	2017	3	87	37,862	

TOTAL OB/XF 126,465

LAND DESCRIPTION

LN	USE CODE	CLS	LAND USE DESCRIPTION	CAP	RD	LOC ZONE	FRONT	DEPTH	TOT LND UTS	UNIT TYPE	DT	DPTH FACT	% COND	TOT ADJ	UNIT PRICE	ADJ UNIT PRICE	LAND VALUE	OTHER ADJUSTMENTS AND NOTES	YEAR	DENSITY	DECL	FRZ	YR	CONSRV
1	000130	C	SFR WATER	100	0006	R-1	100.00	350.00	100.00	FF		1.00	1.00	1.00	4,500.00	4,500.00	450,000							

REVIEW DATE 05/16/2017 BY DJ Total Acres: 0.00 Total Land Value: 450,000 Market: 0 Agricultural: 0 Common: 450,000 PRINTED 08/02/2023 BY SYS

LOT 185
IN OR 2040/1304 & OR 2040/1310
FOREST HILLS 4 PB 4/61

VANPUYMBROUCK ROBERT L & DONNA
2002 SUNRISE DR
FERNANDINA BEACH, FL 32034

2023

00-00-31-128D-0185-0000

NASSAU COUNTY PROPERTY

BUILDING CHARACTERISTICS

ELEMENT	CD	CONSTRUCTION

DOR CODE	0100	SINGLE FAMILY	
MAP NUM		MKT AREA	01
NEIGHBORHOOD/LOC	1007.00		

AREA TYPE	TOTAL GROSS AREA	PCT OF BASE	TOT ADJ AREA	SUBAREA MARKET VALUE
TOTALS				

MARKET ADJUSTMENTS

TYPE	MDL	EFF. AREA	TOT ADJ PTS	EFF. BASE RATE	REPL. COST NEW	AYB	EYB	ECON	FNCT		NORM	% COND

VALUATION SUMMARY

VALUATION BY		STANDARD
Tax Group: 2	Tax Dist:	
BUILDING MARKET VALUE		1,032,127
TOTAL MARKET OB/XF VALUE		211,324
TOTAL LAND VALUE - MARKET		450,000
TOTAL MARKET VALUE		1,693,451
SOH/AGL Deduction		503,563
ASSESSED VALUE		1,189,888
TOTAL EXEMPTION VALUE	HX HB	50,000
BASE TAXABLE VALUE		1,139,888
TOTAL JUST VALUE		1,693,451
NCON VALUE		56,717
INCOME VALUE		
PREVIOUS YEAR MKT VALUE		1,495,054

PERMIT NUM	DESCRIPTION	AMT	ISSUED
20090377	REPAIR/RRF	26,000	03/24/2009
9665B	ADDITION	6,510	03/12/1996
8000	NEW CONSTR	200,000	12/02/1993

SALES DATA

OFF RECORD Number	DATE	TYPE INST	Q U /	V I /	RSN CD	SALE PRICE
2040/1310	4/15/2016	WD	U	I	11	100
GRANTOR: KEFFER RICHARD W JR R						
GRANTEE: VANPUYMBROUCK ROBER						
2040/1304	4/15/2016	WD	U	I	19	1,100,000
GRANTOR: KEFFER RICHARD W III						
GRANTEE: VANPUYMBROUCK ROBER						

BLD DATE		LGL DATE	
XF DATE		LAND DATE	
INC DATE		AG DATE	

BUILDING NOTES

BUILDING DIMENSIONS

EXTRA FEATURES

LN	OB/XF CODE	DESCRIPTION	BLD	CAP	L	W	UNITS	UT	Adj R	ADJ UNIT PRICE	ORIG COND	YEAR ON	YEAR ACTUAL	Q	% COND	OB/XF MKT VALUE	NOTES
17	0462	ST/AL FNC	0	100	0	0	2,088.00	SF	10.00	10.00	100	2017	2017	3	87	18,166	
18	0855	CONC PAVER	0	100	0	0	16.00	SF	7.00	7.00	100	2017	2017	3	97	109	
19	0855	CONC PAVER	0	100	5	6	30.00	SF	7.00	7.00	100	2017	2017	3	97	204	
20	0871	POOL HTR R	0	100	0	0	1.00	UT	2,000.00	2,000.00	100	2017	2017	3	82	1,640	
21	1134	LANDSCP BL	0	100	0	0	852.00	SF	3.00	3.00	100	2017	2017	3	99	2,530	
22	0300	BOAT DCK W	1	100	56	6	336.00	SF	40.00	40.00	100	2023	2018		90	12,096	
23	0300	BOAT DCK W	1	100	0	0	592.00	SF	40.00	40.00	100	2023	2019		93	22,022	
24	0323	BOAT LFT H	1	100	0	0	3.00	UT	2,500.00	2,500.00	100	2023	2019		90	6,750	
25	0310	AL GANG WY	1	100	0	0	20.00	LF	115.00	115.00	100	2023	2019		90	2,070	
26	0303	FLT DOCK W	1	100	20	10	200.00	SF	26.00	26.00	100	2023	2019		93	4,836	

TOTAL OB/XF 70,423

LAND DESCRIPTION

LN	USE CODE	CLS	LAND USE DESCRIPTION	CAP	RD	LOC ZONE	FRONT	DEPTH	TOT LND UTS	UNIT TYPE	DT	DPTH FACT	% COND	TOT ADJ	UNIT PRICE	ADJ UNIT PRICE	LAND VALUE	OTHER ADJUSTMENTS AND NOTES	YEAR	DENSITY	DECL	FRZ	YR	CONSRV

REVIEW DATE 05/16/2017 BY DJ Total Acres: 0.00 Total Land Value: 450,000 Market: 0 Agricultural: 0 Common: 450,000 PRINTED 08/02/2023 BY SYS

LOT 185
IN OR 2040/1304 & OR 2040/1310
FOREST HILLS 4 PB 4/61

VANPUYMBROUCK ROBERT L & DONNA
2002 SUNRISE DR
FERNANDINA BEACH, FL 32034

2023

00-00-31-128D-0185-0000

BUILDING CHARACTERISTICS

ELEMENT	CD	CONSTRUCTION

DOR CODE	0100	SINGLE FAMILY	
MAP NUM		MKT AREA	01
NEIGHBORHOOD/LOC	1007.00		

AREA TYPE	TOTAL GROSS AREA	PCT OF BASE	TOT ADJ AREA	SUBAREA MARKET VALUE
TOTALS				

MARKET ADJUSTMENTS

TYPE	MDL	EFF. AREA	TOT ADJ PTS	EFF. BASE RATE	REPL. COST NEW	AYB	EYB	ECON	FNCT		NORM	% COND

BLD DATE		LGL DATE	
XF DATE		LAND DATE	
INC DATE		AG DATE	

NASSAU COUNTY PROPERTY

PAGE 3 of 3 2

VALUATION SUMMARY

VALUATION BY		STANDARD
Tax Group: 2	Tax Dist:	
BUILDING MARKET VALUE		1,032,127
TOTAL MARKET OB/XF VALUE		211,324
TOTAL LAND VALUE - MARKET		450,000
TOTAL MARKET VALUE		1,693,451
SOH/AGL Deduction		503,563
ASSESSED VALUE		1,189,888
TOTAL EXEMPTION VALUE	HX HB	50,000
BASE TAXABLE VALUE		1,139,888
TOTAL JUST VALUE		1,693,451
NCON VALUE		56,717
INCOME VALUE		
PREVIOUS YEAR MKT VALUE		1,495,054

PERMIT NUM	DESCRIPTION	AMT	ISSUED

SALES DATA

OFF RECORD Number	DATE	TYPE INST	Q / U	V / I	RSN CD	SALE PRICE
2040/1310	4/15/2016	WD	U	I	11	100
GRANTOR: KEFFER RICHARD W JR R						
GRANTEE: VANPUYMBROUCK ROBER						
2040/1304	4/15/2016	WD	U	I	19	1,100,000
GRANTOR: KEFFER RICHARD W III						
GRANTEE: VANPUYMBROUCK ROBER						

BUILDING NOTES

BUILDING DIMENSIONS

EXTRA FEATURES

LN	OB/XF CODE	DESCRIPTION	BLD	CAP	L	W	UNITS	UT	Adj R	ADJ UNIT PRICE	ORIG COND	YEAR ON	YEAR ACTUAL	Q	% COND	OB/XF MKT VALUE	NOTES
27	0317	DCK PLNG W	1	100	0	0	2.00	UT	1,000.00	1,000.00	100	2023	2019		90	1,800	
28	0350	CARPORT WD	1	100	36	30	1,080.00	SF	13.00	13.00	100	2023	2019		90	12,636	

LAND DESCRIPTION

TOTAL OB/XF 14,436

LN	USE CODE	CLS	LAND USE DESCRIPTION	CAP	RD	LOC ZONE	FRONT	DEPTH	TOT LND UTS	UNIT TYPE	DT	DPTH FACT	% COND	TOT ADJ	UNIT PRICE	ADJ UNIT PRICE	LAND VALUE	OTHER ADJUSTMENTS AND NOTES	YEAR	DENSITY	DECL	FRZ	YR	CONSRV

REVIEW DATE 05/16/2017 BY DJ Total Acres: 0.00 Total Land Value: 450,000 Market: 0 Agricultural: 0 Common: 450,000 PRINTED 08/02/2023 BY SYS