LOT 66
FOREST HILLS 1 PB 2/76

BELLEW CRISTINA TEEL & DAVID KEITH
1812 HIGHLAND DRIVE
FERNANDINA BEACH, FL 32034

2023

00-00-31-128A-0066-0000

NASSAU COUNTY PROPERTY

BUILDING CHARACTERISTICS

ELEMENT	CD	CONSTRUCTION
Exterior Wall	17	CB STUCCO 100
Roof Structur	03	GABLE/HIP 100
Roof Cover	03	COMP SHNGL 100
Interior Wall	03	PLASTER 100
Interior Floo	12	HARDWOOD 70
Interior Floo	11	CLAY TILE 30
Air Condition	03	CENTRAL 100
Heating Type	04	AIR DUCTED 100
Bedrooms		3 100
Bathrooms		2.5 100
Frame	03	MASONRY 100
Stories	2.	2. 100
Units		0 100
BUD8 Adjustme	02	DIST FB 100
Occupancy	00	NONE 100
Quality	05	Quality Level 05
DOR CODE	0100	SINGLE FAMILY
MAP NUM		MKT AREA 01
NEIGHBORHOOD/LOC	1007.00	

AREA TYPE	TOTAL GROSS AREA	PCT OF BASE	TOT ADJ AREA	SUBAREA MARKET VALUE
BAS	324	100	324	47,672
FCP	486	25	122	17,951
FOP	29	30	9	1,324
FUS	2,241	100	2,241	329,729
STR	18	10	2	294
UDU	88	55	48	7,063
TOTALS	3,186		2,746	404,031

MARKET ADJUSTMENTS

TYPE	MDL	EFF. AREA	TOT ADJ PTS	EFF. BASE RATE	REPL. COST NEW	AYB	EYB	ECON	FNCT		NORM	% COND
0500	01	2,746	122.9184	175.16	480,989	1950	1990	0	0	0	16.00	84.00

1 SFR CUST – 100% - 2023 Heated Area: 2565 HX Base Yr 2023

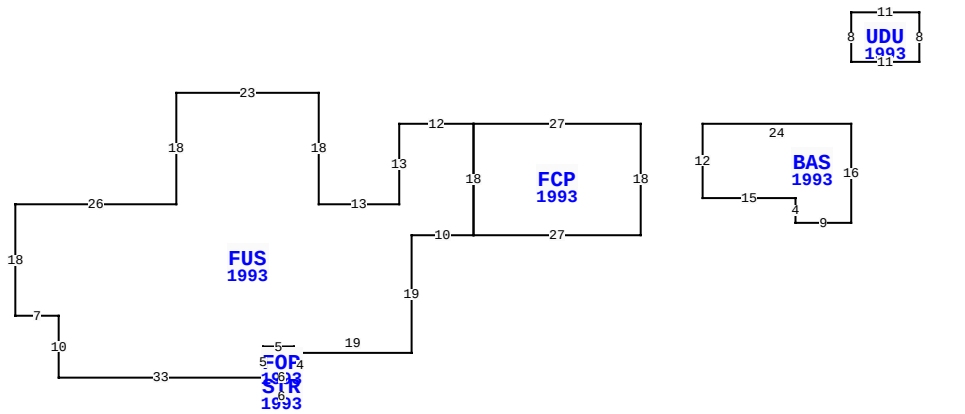

1812 HIGHLAND DR, FERNANDINA BEACH

BLD DATE		LGL DATE	
XF DATE		LAND DATE	
INC DATE		AG DATE	

VALUATION SUMMARY

VALUATION BY		STANDARD
Tax Group: 2	Tax Dist:	
BUILDING MARKET VALUE		404,031
TOTAL MARKET OB/XF VALUE		8,223
TOTAL LAND VALUE - MARKET		300,000
TOTAL MARKET VALUE		712,254
SOH/AGL Deduction		0
ASSESSED VALUE		712,254
TOTAL EXEMPTION VALUE	HX HB	50,000
BASE TAXABLE VALUE		662,254
TOTAL JUST VALUE		712,254
NCON VALUE		0
INCOME VALUE		
PREVIOUS YEAR MKT VALUE		457,806

PERMIT NUM	DESCRIPTION	AMT	ISSUED
20172210	KIT/BATH	55,000	07/19/2017
20034142	REMODEL	2,000	11/17/2003
10631-B	REPAIR/RRF	4,900	07/30/1997

SALES DATA

OFF RECORD Number	DATE	TYPE INST	Q / U	V / I	RSN CD	SALE PRICE
2579/1604	7/25/2022	WD	Q	I	01	915,000
GRANTOR: PEISEL FRANCIS JAMES						
GRANTEE: BELLEW CRISTINA TEE						
2111/0202	3/30/2017	WD	Q	I	02	390,000
GRANTOR: EMBRY MARY MARTHA						
GRANTEE: FRANCIS JAMES PEISE						

BUILDING NOTES

BUILDING DIMENSIONS

BAS=[YR=1993] W24 S12 E15 S4 E9 N16 $ PTR= W34 FCP=[YR=1993] W27 FUS=[YR=1993] W12 S13 W13 N18 W23 S18 W26 S18 E7 S10 E33 STR=[YR=1993] S3 E6 N3 FOP=[YR=1993] N4 W1 N1 W5 S5 E6$ W6$ N5 E5 S1 E19 N19 E10 N18$ S18 E27 N18 $E34$ PTR= N10 UDU=[YR=1993] E11 N8 W11 S8 $ S10 $.

EXTRA FEATURES

LN	OB/XF CODE	DESCRIPTION	BLD	CAP	L	W	UNITS	UT	Adj R	ADJ UNIT PRICE	ORIG COND	YEAR ON	YEAR ACTUAL	Q	% COND	OB/XF MKT VALUE	NOTES
1	0810	CONCRETE A	0	100	0	0	1,053.00	SF	6.50	6.50	100	1950	1950	3	20	1,369	
2	0500	FP-PRE FAB	0	100	0	0	1.00	UT	3,500.00	3,500.00	100	1950	1950	3	20	700	
3	0825	BRICK	0	100	0	0	427.00	SF	8.75	8.75	100	1998	1998	3	93	3,475	
4	0855	CONC PAVER	0	100	0	0	497.00	SF	7.00	7.00	100	1998	1998	3	77	2,679	

LAND DESCRIPTION

TOTAL OB/XF 8,223

LN	USE CODE	CLS	LAND USE DESCRIPTION	CAP	RD	LOC ZONE	FRONT	DEPTH	TOT LND UTS	UNIT TYPE	DT	DPTH FACT	% COND	TOT ADJ	UNIT PRICE	ADJ UNIT PRICE	LAND VALUE	OTHER ADJUSTMENTS AND NOTES	YEAR	DENSITY	DECL	FRZ	YR	CONSRV
1	000100	C	SFR	100	0006	R-1	139.00	208.00	1.00	LT		1.00	1.00	1.00	300,000.00	300,000.00	300,000							

REVIEW DATE 01/30/2017 BY DJ Total Acres: 0.00 Total Land Value: 300,000 Market: 0 Agricultural: 0 Common: 300,000 PRINTED 08/02/2023 BY SYS