LOT 61
IN OR 1962/172
FOREST HILLS #1 PB 2/76

AHMAD NASIR J TRUST #100/AHMAD NASIR J TRUSTEE
296 WEST SPRING ST
SOUTH ELGIN, IL 60177

2023

00-00-31-128A-0061-0000

BUILDING CHARACTERISTICS

ELEMENT	CD	CONSTRUCTION
Exterior Wall	19	COMMON BRK 60
Exterior Wall	10	ABOVE AVG 40
Roof Structur	03	GABLE/HIP 100
Roof Cover	03	COMP SHNGL 100
Interior Wall	05	DRYWALL 80
Interior Wall	04	PLYWOOD 20
Interior Floo	12	HARDWOOD 60
Interior Floo	11	CLAY TILE 40
Air Condition	03	CENTRAL 100
Heating Type	04	AIR DUCTED 100
Bedrooms		4 100
Bathrooms		3 100
Frame	03	MASONRY 100
Stories	1.	1. 100
Units		0 100
BUD8 Adjustme	02	DIST FB 100
Quality	03	Quality Level 03

DOR CODE	0100	SINGLE FAMILY	
MAP NUM		MKT AREA	01
NEIGHBORHOOD/LOC	1007.00		

AREA TYPE	TOTAL GROSS AREA	PCT OF BASE	TOT ADJ AREA	SUBAREA MARKET VALUE
BAS	3,022	100	3,022	411,407
FGR	430	55	236	32,128
FGR	550	55	302	41,114
FOP	210	30	63	8,577
FSP	408	40	163	22,190
STP	44	10	4	545
TOTALS	4,664		3,790	515,960

MARKET ADJUSTMENTS

TYPE	MDL	EFF. AREA	TOT ADJ PTS	EFF. BASE RATE	REPL. COST NEW	AYB	EYB	ECON	FNCT		NORM	% COND
0900	11	3,790	141.2748	167.76	635,810	1950	1995	0	0	0	18.85	81.15

1 SNGL FAM – 0% - 0 Heated Area: 3022 HX Base Yr

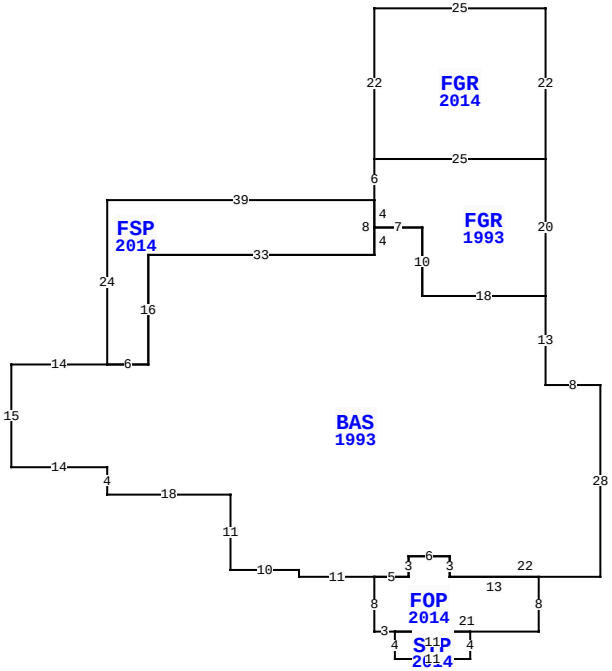

1832 HIGHLAND DR, FERNANDINA BEACH

BLD DATE		LGL DATE	
XF DATE		LAND DATE	
INC DATE		AG DATE	

NASSAU COUNTY PROPERTY

PAGE 1 of 2 2

VALUATION SUMMARY

VALUATION BY	STANDARD
Tax Group: 2	Tax Dist:
BUILDING MARKET VALUE	515,960
TOTAL MARKET OB/XF VALUE	53,408
TOTAL LAND VALUE - MARKET	540,000
TOTAL MARKET VALUE	1,109,368
SOH/AGL Deduction	0
ASSESSED VALUE	1,109,368
TOTAL EXEMPTION VALUE	0
BASE TAXABLE VALUE	1,109,368
TOTAL JUST VALUE	1,109,368
NCON VALUE	0
INCOME VALUE	
PREVIOUS YEAR MKT VALUE	1,047,350

PERMIT NUM	DESCRIPTION	AMT	ISSUED
20141377	REMODEL	275,000	06/25/2014
20110721	DEMOLITION	6,600	05/11/2011
20061824	REPAIR/RRF	10,200	07/31/2006
20021434	OTHER	16,500	08/21/2002
20012012	ELEC OTHER	0	09/10/2001
8485	REPAIR/RRF	5,500	08/11/1994

SALES DATA

OFF RECORD Number	DATE	TYPE INST	Q U /	V I /	RSN CD	SALE PRICE
1962/0172	1/21/2015	WD	U	I	11	100
GRANTOR: AHMAD NASIR J						
GRANTEE: AHMAD NASIR J TRUST						
1869/1678	7/03/2013	SW	U	I	16	102,500
GRANTOR: DOOLEY LAURA D						
GRANTEE: AHMAD NASIR J						

BUILDING NOTES

BUILDING DIMENSIONS

FGR=[YR=2014] W25 S22 FGR=[YR=1993] S6 FSP=[YR=2014] W39 S24 BAS=[YR=1993] W14 S15 E14 S4 E18S11 E10 S1 E11 FOP=[YR=2014] S8 E3 STP=[YR=2014] S4 E11 N4 W11$ E21 N8 W13 N3 W6 S3 W5 $ E5 N3 E6 S3 E22 N28 W8 N13 W18 N10 W7 S4 W33 S16 W6$ E6 N16 E33 N8$ S4 E7 S10 E18 N20 W25$ E25 N22$.

EXTRA FEATURES

LN	OB/XF CODE	DESCRIPTION	BLD	CAP	L	W	UNITS	UT	Adj R	ADJ UNIT PRICE	ORIG COND	YEAR ON	YEAR ACTUAL	Q	% COND	OB/XF MKT VALUE	NOTES
7	0300	BOAT DCK W	0	0	0	0	878.00	SF	40.00	40.00	100	2002	2002	3	32	11,238	
8	0302	FLT DOCK C	0	0	8	40	320.00	SF	50.00	50.00	100	2002	2002	3	21	3,360	
9	0310	AL GANG WY	0	0	0	0	20.00	LF	115.00	115.00	100	2002	2002	3	21	483	
10	0317	DCK PLNG W	0	0	0	0	9.00	UT	1,000.00	1,000.00	100	2002	2002	3	21	1,890	
11	0322	BOAT LFT L	0	0	0	0	1.00	UT	1,500.00	1,500.00	100	2002	2002	3	21	315	
12	1242	WD DECK A	0	0	10	10	100.00	SF	10.00	10.00	100	2002	2002	3	21	210	
13	0920	CWALL-WD/M	0	0	0	0	110.00	LF	390.00	390.00	100	1980	1980	3	20	8,580	
14	0855	CONC PAVER	0	0	0	0	2,824.00	SF	7.00	7.00	100	2014	2014	3	95	18,780	
15	0855	CONC PAVER	0	0	0	0	144.00	SF	7.00	7.00	100	2014	2014	3	95	958	
16	0855	CONC PAVER	0	0	0	0	962.00	SF	7.00	7.00	100	2014	2014	3	95	6,397	

TOTAL OB/XF 52,211

LAND DESCRIPTION

LN	USE CODE	CLS	LAND USE DESCRIPTION	CAP	RD	LOC ZONE	FRONT	DEPTH	TOT LND UTS	UNIT TYPE	DT	DPTH FACT	% COND	TOT ADJ	UNIT PRICE	ADJ UNIT PRICE	LAND VALUE	OTHER ADJUSTMENTS AND NOTES	YEAR	DENSITY	DECL	FRZ	YR	CONSRV
1	000130	C	SFR WATER	0	0006	R-1	150.00	435.00	150.00	FF		1.00	1.00	0.80	4,500.00	3,600.00	540,000							

REVIEW DATE 08/29/2019 BY DJA Total Acres: 0.00 Total Land Value: 540,000 Market: 0 Agricultural: 0 Common: 540,000 PRINTED 08/02/2023 BY SYS

LOT 61
IN OR 1962/172
FOREST HILLS #1 PB 2/76

AHMAD NASIR J TRUST #100/AHMAD NASIR J TRUSTEE
296 WEST SPRING ST
SOUTH ELGIN, IL 60177

2023

00-00-31-128A-0061-0000

BUILDING CHARACTERISTICS

ELEMENT	CD	CONSTRUCTION

DOR CODE	0100	SINGLE FAMILY	
MAP NUM		MKT AREA	01
NEIGHBORHOOD/LOC	1007.00		

AREA TYPE	TOTAL GROSS AREA	PCT OF BASE	TOT ADJ AREA	SUBAREA MARKET VALUE
TOTALS				

MARKET ADJUSTMENTS

TYPE	MDL	EFF. AREA	TOT ADJ PTS	EFF. BASE RATE	REPL. COST NEW	AYB	EYB	ECON	FNCT		NORM	% COND

BLD DATE		LGL DATE	
XF DATE		LAND DATE	
INC DATE		AG DATE	

NASSAU COUNTY PROPERTY

PAGE 2 of 2 2

VALUATION SUMMARY

VALUATION BY	STANDARD
Tax Group: 2	Tax Dist:
BUILDING MARKET VALUE	515,960
TOTAL MARKET OB/XF VALUE	53,408
TOTAL LAND VALUE - MARKET	540,000
TOTAL MARKET VALUE	1,109,368
SOH/AGL Deduction	0
ASSESSED VALUE	1,109,368
TOTAL EXEMPTION VALUE	0
BASE TAXABLE VALUE	1,109,368
TOTAL JUST VALUE	1,109,368
NCON VALUE	0
INCOME VALUE	
PREVIOUS YEAR MKT VALUE	1,047,350

PERMIT NUM	DESCRIPTION	AMT	ISSUED
7112	ADDITION	7,495	06/22/1992

SALES DATA

OFF RECORD Number	DATE	TYPE INST	Q / U	V / I	RSN CD	SALE PRICE
1962/0172	1/21/2015	WD	U	I	11	100
GRANTOR: AHMAD NASIR J						
GRANTEE: AHMAD NASIR J TRUST						
1869/1678	7/03/2013	SW	U	I	16	102,500
GRANTOR: DOOLEY LAURA D						
GRANTEE: AHMAD NASIR J						

BUILDING NOTES

BUILDING DIMENSIONS

EXTRA FEATURES

LN	OB/XF CODE	DESCRIPTION	BLD	CAP	L	W	UNITS	UT	Adj R	ADJ UNIT PRICE	ORIG COND	YEAR ON	YEAR ACTUAL	Q	% COND	OB/XF MKT VALUE	NOTES
17	0855	CONC PAVER	0	0	0	0	180.00	SF	7.00	7.00	100	2014	2014	3	95	1,197	

LAND DESCRIPTION

TOTAL OB/XF 1,197

LN	USE CODE	CLS	LAND USE DESCRIPTION	CAP	RD	LOC ZONE	FRONT	DEPTH	TOT LND UTS	UNIT TYPE	DT	DPTH FACT	% COND	TOT ADJ	UNIT PRICE	ADJ UNIT PRICE	LAND VALUE	OTHER ADJUSTMENTS AND NOTES	YEAR	DENSITY	DECL	FRZ	YR	CONSRV

REVIEW DATE 08/29/2019 BY DJA Total Acres: 0.00 Total Land Value: 540,000 Market: 0 Agricultural: 0 Common: 540,000 PRINTED 08/02/2023 BY SYS