BLOCK 8 N1/2 OF LOT 10
S-1 OF LOT 10
IN OR 2020/122

HALE LARRY & MADELINE
2593 1ST AVE UNIT A
FERNANDINA BEACH, FL 32034

2023

00-00-31-114B-0008-0101

BUILDING CHARACTERISTICS

ELEMENT	CD	CONSTRUCTION
Exterior Wall	10	ABOVE AVG 100
Roof Structur	03	GABLE/HIP 100
Roof Cover	03	COMP SHNGL 100
Interior Wall	05	DRYWALL 100
Interior Floo	14	CARPET 60
Interior Floo	11	CLAY TILE 40
Air Condition	03	CENTRAL 100
Heating Type	04	AIR DUCTED 100
Bedrooms		3 100
Bathrooms		2 100
Frame	02	WOOD FRAME 100
Stories	2.	2. 100
Units		0 100
Quality	05	Quality Level 05
DOR CODE	0100	SINGLE FAMILY
MAP NUM		MKT AREA 01
NEIGHBORHOOD/LOC	1043.00	

AREA TYPE	TOTAL GROSS AREA	PCT OF BASE	TOT ADJ AREA	SUBAREA MARKET VALUE
BAL	266	15	40	7,736
BAS	518	100	518	100,182
FGR	350	55	192	37,133
FOP	84	30	25	4,835
FUS	868	100	868	167,873
STP	12	10	1	194
STP	81	10	8	1,547
STR	70	10	7	1,354
UOP	81	20	16	3,094
TOTALS	2,330		1,675	323,947

MARKET ADJUSTMENTS

TYPE	MDL	EFF. AREA	TOT ADJ PTS	EFF. BASE RATE	REPL. COST NEW	AYB	EYB	ECON	FNCT		NORM	% COND
0320	12	1,675	226.1960	214.89	359,941	2001	2001	0	0	0	10.00	90.00

1 TOWNHOUSE - 100% - 2018 Heated Area: 1386 HX Base Yr 2018

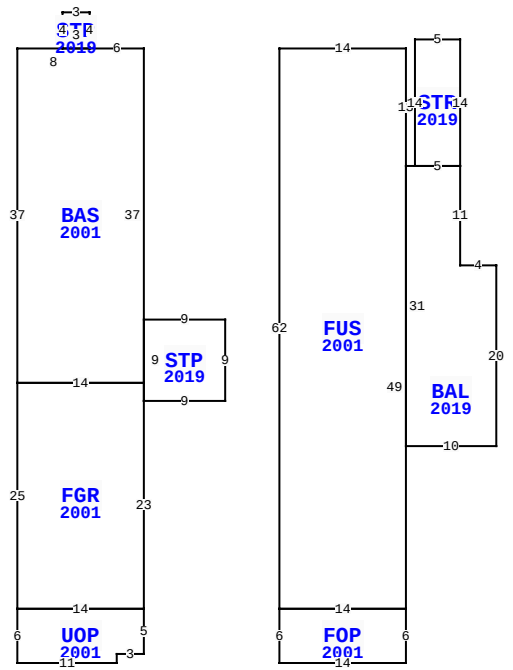

2593 1ST AVE, FERNANDINA BEACH

BLD DATE		LGL DATE	
XF DATE		LAND DATE	
INC DATE		AG DATE	

NASSAU COUNTY PROPERTY

PAGE 1 of 1 2

VALUATION SUMMARY

VALUATION BY		STANDARD
Tax Group: 2	Tax Dist:	
BUILDING MARKET VALUE		323,947
TOTAL MARKET OB/XF VALUE		12,731
TOTAL LAND VALUE - MARKET		180,000
TOTAL MARKET VALUE		516,678
SOH/AGL Deduction		214,787
ASSESSED VALUE		301,891
TOTAL EXEMPTION VALUE	HX HB	50,000
BASE TAXABLE VALUE		251,891
TOTAL JUST VALUE		516,678
NCON VALUE		0
INCOME VALUE		
PREVIOUS YEAR MKT VALUE		437,678

PERMIT NUM	DESCRIPTION	AMT	ISSUED
20190388	2ND FLR DECK	0	06/19/2019

SALES DATA

OFF RECORD Number	DATE	TYPE INST	Q U	V I	RSN CD	SALE PRICE
2020/0122	12/16/2015	SW	U	I	12	212,500
GRANTOR: FEDERAL NATIONAL MORT						
GRANTEE: HALE LARRY & MADELI						
1977/1566	5/04/2015	CT	U	I	18	100
GRANTOR: CLERK OF COURT						
GRANTEE: FEDERAL NATIONAL MO						

BUILDING NOTES

BUILDING DIMENSIONS

BAS=[YR=2001] W6 STP=[YR=2019] N4 W3 S4 E3$ W8 S37
FGR=[YR=2001] S25 UOP=[YR=2001] S6 E11 N1 E3 N5 W14 $ E14
N23 STP=[YR=2019] E9 N9 W9 S9$ N2 W14 $ E14 N37 $ PTR= E15
FUS=[YR=2001] E14 S13 BAL=[YR=2019] E1 STR=[YR=2019] N14 E5
S14 W5$ E5 S11 E4 S20 W10 N31$ S49 FOP=[YR=2001] S6 W14 N6
E14 $ W14 N62 $ W15 $.

EXTRA FEATURES

LN	OB/XF CODE	DESCRIPTION	BLD	CAP	L	W	UNITS	UT	Adj R	ADJ UNIT PRICE	ORIG COND	YEAR ON	YEAR ACTUAL	Q	% COND	OB/XF MKT VALUE	NOTES
1	0810	CONCRETE A	0	100	0	0	460.00	SF	6.50	6.50	100	2001	2001	3	82	2,452	
2	0810	CONCRETE A	0	100	0	0	108.00	SF	6.50	6.50	100	2001	2001	3	82	576	
3	1242	WD DECK A	0	100	0	0	56.00	SF	10.00	10.00	100	2001	2001	3	20	112	
4	0855	CONC PAVER	0	100	0	0	1,384.00	SF	7.00	7.00	100	2019	2019	3	99	9,591	

LAND DESCRIPTION

TOTAL OB/XF 12,731

LN	USE CODE	CLS	LAND USE DESCRIPTION	CAP	RD	LOC ZONE	FRONT	DEPTH	TOT LND UTS	UNIT TYPE	DT	DPTH FACT	% COND	TOT ADJ	UNIT PRICE	ADJ UNIT PRICE	LAND VALUE	OTHER ADJUSTMENTS AND NOTES	YEAR	DENSITY	DECL	FRZ	YR	CONSRV
1	000100	C	SFR	100			30.00	115.00	30.00	FF		1.00	1.00	1.50	4,000.00	6,000.00	180,000							

REVIEW DATE 12/13/2019 BY DJNW Total Acres: 0.00 Total Land Value: 180,000 Market: 0 Agricultural: 0 Common: 180,000 PRINTED 08/02/2023 BY SYS