LOT 77
IN OR 2257/1599
BUCKS FDNA BEACH 1 PB 2/30

KILLEN K ALAN
PO BOX 1509
FERNANDINA BEACH, FL 32035

2023

00-00-31-114A-0077-0000

NASSAU COUNTY PROPERTY

BUILDING CHARACTERISTICS

ELEMENT	CD	CONSTRUCTION
Exterior Wall	05	AVERAGE 50
Exterior Wall	17	CB STUCCO 50
Roof Structur	03	GABLE/HIP 100
Roof Cover	03	COMP SHNGL 100
Interior Wall	05	DRYWALL 100
Interior Floo	14	CARPET 70
Interior Floo	11	CLAY TILE 30
Air Condition	03	CENTRAL 100
Heating Type	04	AIR DUCTED 100
Bedrooms		5 100
Bathrooms		4 100
Frame	02	WOOD FRAME 100
Stories	2.	2. 100
Units		0 100
BUD8 Adjustme	02	DIST FB 100
Occupancy	00	NONE 100
Quality	03	Quality Level 03
DOR CODE	0800	MULTI-FAMILY
MAP NUM		MKT AREA 01
NEIGHBORHOOD/LOC	1058.00	

AREA TYPE	TOTAL GROSS AREA	PCT OF BASE	TOT ADJ AREA	SUBAREA MARKET VALUE
APT	816	100	816	94,057
BAL	480	15	72	8,299
BAS	816	100	816	94,057
BAS	90	100	90	10,374
DCK	140	10	14	1,614
DCK	96	10	10	1,152
FOP	192	30	58	6,685
FST	90	55	50	5,763
PTO	16	5	1	116
UOP	64	20	13	1,498
TOTALS	2,800		1,940	223,617

MARKET ADJUSTMENTS

TYPE	MDL	EFF. AREA	TOT ADJ PTS	EFF. BASE RATE	REPL. COST NEW	AYB	EYB	ECON	FNCT		NORM	% COND
2700	01	1,940	114.5620	136.62	265,043	1970	1990	0	0	0	15.63	84.37

1 DUPLEX – 100% - 2019 Heated Area: 1722 HX Base Yr 2019

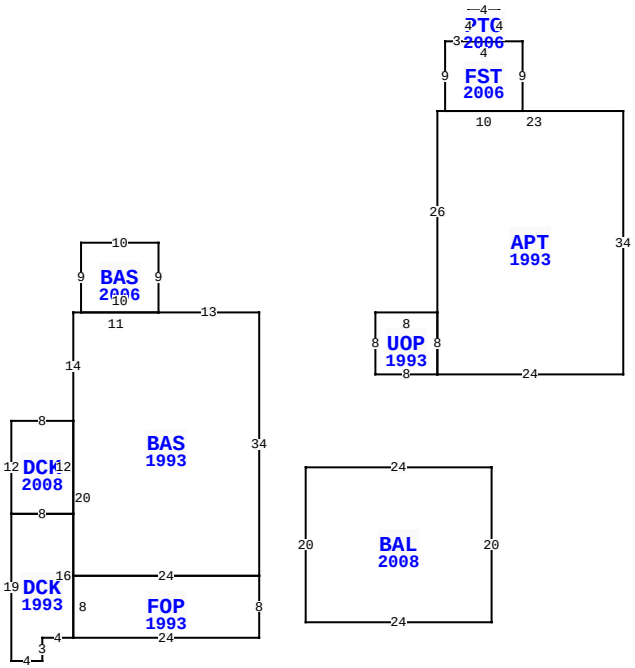

2681 S FLETCHER AVE, FERNANDINA BEACH

BLD DATE		LGL DATE	
XF DATE		LAND DATE	
INC DATE		AG DATE	

VALUATION SUMMARY

VALUATION BY		STANDARD
Tax Group: 2	Tax Dist:	
BUILDING MARKET VALUE		223,617
TOTAL MARKET OB/XF VALUE		5,405
TOTAL LAND VALUE - MARKET		312,000
TOTAL MARKET VALUE		541,022
SOH/AGL Deduction		185,938
ASSESSED VALUE		355,084
TOTAL EXEMPTION VALUE	HX HB	50,000
BASE TAXABLE VALUE		305,084
TOTAL JUST VALUE		541,022
NCON VALUE		0
INCOME VALUE		
PREVIOUS YEAR MKT VALUE		518,991

PERMIT NUM	DESCRIPTION	AMT	ISSUED
20101969	OTHER	1,850	11/15/2010
20080712	XFOB	3,200	04/29/2008
20080686	REPAIR/RRF	3,740	04/25/2008
20053200	H/AC	1,000	12/16/2005
20053158	REMODEL	1,000	12/12/2005
20053125	OTHER	1,000	12/08/2005

SALES DATA

OFF RECORD Number	DATE	TYPE INST	Q U	V I	RSN CD	SALE PRICE
2257/1599	2/27/2019	SW	U	I	11	100
GRANTOR: KILLEN SHANNON E						
GRANTEE: KILLEN K ALAN						
0914/1614	1/10/2000	WD	Q	I		170,000
GRANTOR: BARRY LAND LLC						
GRANTEE: KILLEN K ALAN & SHA						

BUILDING NOTES

BUILDING DIMENSIONS

BAS=[YR=1993] W13 BAS=[YR=2006] N9 W10 S9 E10$ W11 S14 DCK=[YR=2008] W8 S12 DCK=[YR=1993] S19 E4N3 E4 FOP=[YR=1993] E24 N8 W24 S8$ N16 W8$ E8 N12$ S20 E24 N34$ PTR=E15 UOP=[YR=1993] E8 APT=[YR=1993] N26 E1 FST=[YR=2006] N9 E3 PTO=[YR=2006] N4 E4 S4W4$ E7 S9 W10$ E23 S34 W24 N8$S8 W8 N8$ W15$ PTR=E30 S20 BAL=[YR=2008] S20 W24 N20 E24$ N20 W30$.

EXTRA FEATURES

LN	OB/XF CODE	DESCRIPTION	BLD	CAP	L	W	UNITS	UT	Adj R	ADJ UNIT PRICE	ORIG COND	YEAR ON	YEAR ACTUAL	Q	% COND	OB/XF MKT VALUE	NOTES
1	0812	CONCRETE C	0	100	0	0	1,557.00	SF	4.00	4.00	100	2001	2001	3	82	5,107	
3	0810	CONCRETE A	0	100	14	4	56.00	SF	6.50	6.50	100	2001	2001	3	82	298	

LAND DESCRIPTION

TOTAL OB/XF 5,405

LN	USE CODE	CLS	LAND USE DESCRIPTION	CAP	RD	LOC ZONE	FRONT	DEPTH	TOT LND UTS	UNIT TYPE	DT	DPTH FACT	% COND	TOT ADJ	UNIT PRICE	ADJ UNIT PRICE	LAND VALUE	OTHER ADJUSTMENTS AND NOTES	YEAR	DENSITY	DECL	FRZ	YR	CONSRV
1	000800	C	MULTI-FAM	100			50.00	110.00	50.00	FF		1.00	1.00	0.96	6,500.00	6,240.00	312,000							

REVIEW DATE 10/16/2018 BY DJX Total Acres: 0.00 Total Land Value: 312,000 Market: 0 Agricultural: 0 Common: 312,000 PRINTED 08/02/2023 BY SYS