LOT 61
IN OR 2241/1443
BUCKS FDNA BEACH #1 PB 2/30

HART PAMELA A REVOCABLE TRUST/HART PAMELA TRUSTEE
2700 S FLETCHER AVE
FERNANDINA BEACH, FL 32034

2023

00-00-31-114A-0061-0000

BUILDING CHARACTERISTICS

ELEMENT	CD	CONSTRUCTION
Exterior Wall	14	WD SHINGLE 100
Roof Structur	08	IRREGULAR 100
Roof Cover	11	SLATE 100
Interior Wall	05	DRYWALL 100
Interior Floo	12	HARDWOOD 60
Interior Floo	11	CLAY TILE 40
Air Condition	03	CENTRAL 100
Heating Type	04	AIR DUCTED 100
Bedrooms		4 100
Bathrooms		3 100
Frame	02	WOOD FRAME 100
Stories	3.	3. 100
Units		0 100
BUD8 Adjustme	02	DIST FB 100
Quality	06	Quality Level 06
DOR CODE	0100	SINGLE FAMILY
MAP NUM		MKT AREA 01
NEIGHBORHOOD/LOC	1052.00	

AREA TYPE	TOTAL GROSS AREA	PCT OF BASE	TOT ADJ AREA	SUBAREA MARKET VALUE
BAS	768	100	768	179,911
DCK	12	10	1	234
DCK	16	10	2	468
DCK	36	10	4	937
DCK	141	10	14	3,279
DCK	156	10	16	3,748
DCK	512	10	51	11,947
FGR	396	55	218	51,068
FOP	112	30	34	7,965
FOP	112	30	34	7,965
TOTALS	4,016		2,881	674,901

MARKET ADJUSTMENTS

TYPE	MDL	EFF. AREA	TOT ADJ PTS	EFF. BASE RATE	REPL. COST NEW	AYB	EYB	ECON	FNCT		NORM	% COND
0500	11	2,881	171.2417	244.02	703,022	2004	2014	0	0	0	4.00	96.00

1 SFR CUST – 100% - 2019 Heated Area: 2503 HX Base Yr 2019

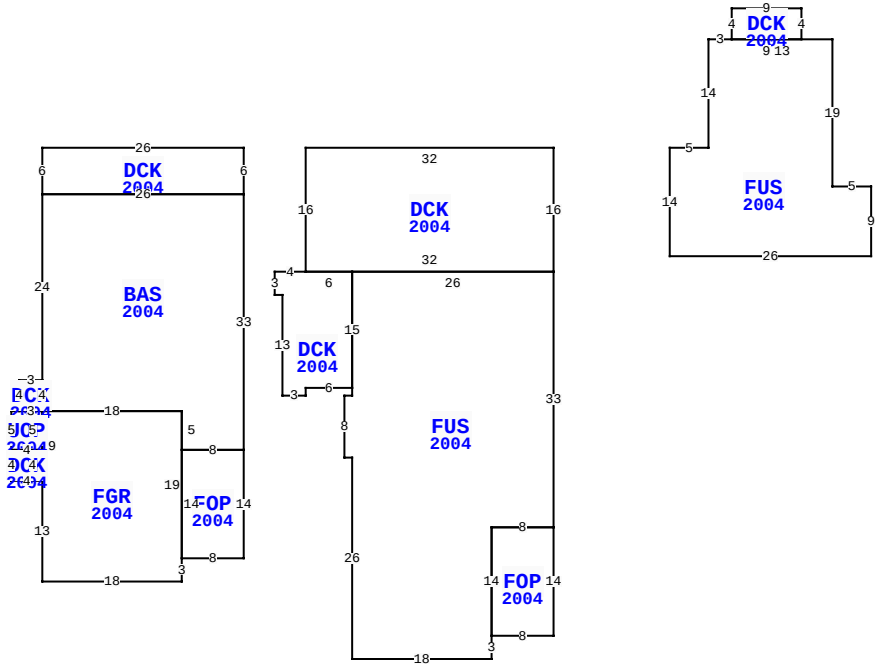

** This building has 13 Sub-Areas

2700 S FLETCHER AVE, FERNANDINA BEACH

BLD DATE		LGL DATE	
XF DATE		LAND DATE	
INC DATE		AG DATE	

NASSAU COUNTY PROPERTY

PAGE 1 of 1 2

VALUATION SUMMARY

VALUATION BY		STANDARD
Tax Group: 2	Tax Dist:	
BUILDING MARKET VALUE		674,901
TOTAL MARKET OB/XF VALUE		0
TOTAL LAND VALUE - MARKET		750,000
TOTAL MARKET VALUE		1,424,901
SOH/AGL Deduction		305,950
ASSESSED VALUE		1,118,951
TOTAL EXEMPTION VALUE	HX HB	50,000
BASE TAXABLE VALUE		1,068,951
TOTAL JUST VALUE		1,424,901
NCON VALUE		0
INCOME VALUE		
PREVIOUS YEAR MKT VALUE		1,449,142

PERMIT NUM	DESCRIPTION	AMT	ISSUED
20051020	XFOB	1,000	01/10/2005
B0040152	NEW CONSTR	200,000	01/24/2004

SALES DATA

OFF RECORD Number	DATE	TYPE INST	Q / U	V / I	RSN CD	SALE PRICE
2241/1443	11/29/2018	WD	U	I	11	100
GRANTOR: FAE PAMELA HART LLC						
GRANTEE: HART PAMELA A REVOC						
2197/1969	5/21/2018	WD	Q	I	01	1,715,000
GRANTOR: PENDERGRAST JANET CHA						
GRANTEE: FAE PAMELA HART LLC						

BUILDING NOTES

BUILDING DIMENSIONS

DCK=[YR=2004] W32 S16 DCK=[YR=2004] W4 S3 E1 S13 E3 N1 E6 FUS=[YR=2004] S1 W1 S8 E1 S26 E18 N3 FOP=[YR=2004] E8 N14 W8 S14 $ N14 E8 N33 W26 S15 $ N15 W6 $ E32 N16 $ PTR= E15 FUS=[YR=2004] E5 N14 E3 DCK=[YR=2004] N4 E9 S4 W9 $ E13 S19 E5 S9 W26 N14 $ W15 $ PTR= W40 DCK=[YR=2004] W26 S6 BAS=[YR=2004] S24 DCK=[YR=2004] W3 S4 UOP=[YR=2004] W1 S5 DCK=[YR=2004] S4 E4 FGR=[YR=2004] S13 E18 N3 FOP=[YR=2004] E8 N14 W8 S14 $ N19 W18 S9 $ N4 W4 $ E4 N5 W3 $ E3 N4 $ S4 E18 S5 E8 N33 W26 $ E26 N6 $ E40 $.

EXTRA FEATURES

L N	OB/XF CODE	DESCRIPTION	BLD	CAP	L	W	UNITS	UT	Adj R	ADJ UNIT PRICE	ORIG COND	YEAR ON	YEAR ACTUAL	Q	% COND	OB/XF MKT VALUE	NOTES

LAND DESCRIPTION

TOTAL OB/XF 0

L N	USE CODE	CLS	LAND USE DESCRIPTION	CAP	R D	LOC ZONE	FRONT	DEPTH	TOT LND UTS	UNIT TYPE	D T	DPTH FACT	% COND	TOT ADJ	UNIT PRICE	ADJ UNIT PRICE	LAND VALUE	OTHER ADJUSTMENTS AND NOTES	YEAR	DENSITY	DECL	FRZ	YR	CONSRV
1	000120	C	SFR OCN FT	100			50.00	290.00	50.00	FF		1.00	1.00	1.00	15,000.00	15,000.00	750,000							

REVIEW DATE 10/16/2018 BY DJX Total Acres: 0.00 Total Land Value: 750,000 Market: 0 Agricultural: 0 Common: 750,000 PRINTED 08/02/2023 BY SYS