LOT 57
IN OR 1442/326
BUCKS FDNA BEACH 1 PB 2/30

JORDAN FLORIDA RENTALS LLC
10689 BIG CANOE
JASPER, GA 30143

2023

00-00-31-114A-0057-0000

NASSAU COUNTY PROPERTY

BUILDING CHARACTERISTICS

ELEMENT	CD	CONSTRUCTION
Exterior Wall	07	ASB SHNGLE 50
Exterior Wall	15	CONC BLOCK 50
Roof Structur	03	GABLE/HIP 100
Roof Cover	03	COMP SHNGL 100
Interior Wall	05	DRYWALL 90
Interior Wall	04	PLYWOOD 10
Interior Floo	09	PINE WOOD 80
Interior Floo	08	SHT VINYL 20
Air Condition	03	CENTRAL 100
Heating Type	04	AIR DUCTED 100
Bedrooms		4 100
Bathrooms		2 100
Frame	03	MASONRY 100
Stories	2.	2. 100
Units		0 100
BUD8 Adjustme	02	DIST FB 100
Occupancy	00	NONE 100
Quality	03	Quality Level 03
DOR CODE	0800	MULTI-FAMILY
MAP NUM		MKT AREA 01
NEIGHBORHOOD/LOC	1052.00	

AREA TYPE	TOTAL GROSS AREA	PCT OF BASE	TOT ADJ AREA	SUBAREA MARKET VALUE
APT	720	100	720	62,935
APT	720	100	720	62,935
DCK	78	10	8	699
DCK	117	10	12	1,049
DCK	80	10	8	699
PTO	91	5	5	437
STR	56	10	6	524
UOP	78	20	16	1,399
UOP	117	20	23	2,011
TOTALS	2,057		1,518	132,689

MARKET ADJUSTMENTS

TYPE	MDL	EFF. AREA	TOT ADJ PTS	EFF. BASE RATE	REPL. COST NEW	AYB	EYB	ECON	FNCT		NORM	% COND
2700	01	1,518	97.4100	116.16	176,331	1950	1980	0	0	0	24.75	75.25

1 DUPLEX – 0% - 0 Heated Area: 1440 HX Base Yr

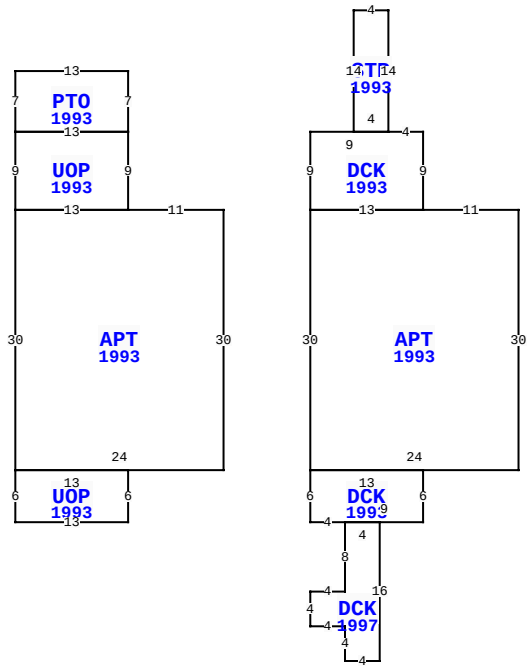

2666 S FLETCHER AVE, FERNANDINA BEACH

BLD DATE		LGL DATE	
XF DATE		LAND DATE	
INC DATE		AG DATE	

VALUATION SUMMARY

VALUATION BY	STANDARD
Tax Group: 2	Tax Dist:
BUILDING MARKET VALUE	132,689
TOTAL MARKET OB/XF VALUE	0
TOTAL LAND VALUE - MARKET	750,000
TOTAL MARKET VALUE	882,689
SOH/AGL Deduction	19,392
ASSESSED VALUE	863,297
TOTAL EXEMPTION VALUE	0
BASE TAXABLE VALUE	863,297
TOTAL JUST VALUE	882,689
NCON VALUE	0
INCOME VALUE	
PREVIOUS YEAR MKT VALUE	883,293

PERMIT NUM	DESCRIPTION	AMT	ISSUED
B969922	REPAIR/RRF	2,310	07/16/1996
B9088	REPAIR/RRF	2,503	05/19/1995

SALES DATA

OFF RECORD Number	DATE	TYPE INST	Q / U	V / I	RSN CD	SALE PRICE
1442/0326	9/05/2006	WD	U	I	19	618,900
GRANTOR: JORDAN EVELYN ANN						
GRANTEE: JORDAN FLORIDA RENT						
0223/0006	8/01/1976	WD	U	I		21,900
GRANTOR:						
GRANTEE:						

BUILDING NOTES

BUILDING DIMENSIONS

APT=[YR=1993] W11 UOP=[YR=1993] N9 PTO=[YR=1993] N7W13S7E13$ W13S9E13$ W13 S30 UOP=[YR=1993] S6E13N6W13$E24 N30$ PTR=E10 APT=[YR=1993] S30 DCK=[YR=1993] S6E4 DCK=[YR=1997] S8 W4S4E4 S4E4N16W4$E9N6W13$E24N30 W11 DCK=[YR=1993] N9W4STR=[YR=1993] N14W4S14E4 $W9S9E13$W13$ W10$.

EXTRA FEATURES

L N	OB/XF CODE	DESCRIPTION	BLD	CAP	L	W	UNITS	UT	Adj R	ADJ UNIT PRICE	ORIG COND	YEAR ON	YEAR ACTUAL	Q	% COND	OB/XF MKT VALUE	NOTES

LAND DESCRIPTION

TOTAL OB/XF 0

L N	USE CODE	CLS	LAND USE DESCRIPTION	CAP	R D	LOC ZONE	FRONT	DEPTH	TOT LND UTS	UNIT TYPE	D T	DPTH FACT	% COND	TOT ADJ	UNIT PRICE	ADJ UNIT PRICE	LAND VALUE	OTHER ADJUSTMENTS AND NOTES	YEAR	DENSITY	DECL	FRZ	YR	CONSRV
1	000120	C	SFR OCN FT	0			50.00	290.00	50.00	FF		1.00	1.00	1.00	15,000.00	15,000.00	750,000							

REVIEW DATE 10/16/2018 BY DJX Total Acres: 0.00 Total Land Value: 750,000 Market: 0 Agricultural: 0 Common: 750,000 PRINTED 08/02/2023 BY SYS